This is a digital copy of a book that was preserved for generations on library shelves before it was carefully scanned by Google as part of a project to make the world's books discoverable online.

It has survived long enough for the copyright to expire and the book to enter the public domain. A public domain book is one that was never subject to copyright or whose legal copyright term has expired. Whether a book is in the public domain may vary country to country. Public domain books are our gateways to the past, representing a wealth of history, culture and knowledge that's often difficult to discover.

Marks, notations and other marginalia present in the original volume will appear in this file - a reminder of this book's long journey from the publisher to a library and finally to you.

Usage guidelines

Google is proud to partner with libraries to digitize public domain materials and make them widely accessible. Public domain books belong to the public and we are merely their custodians. Nevertheless, this work is expensive, so in order to keep providing this resource, we have taken steps to prevent abuse by commercial parties, including placing technical restrictions on automated querying.

We also ask that you:

+ *Make non-commercial use of the files* We designed Google Book Search for use by individuals, and we request that you use these files for personal, non-commercial purposes.

+ *Refrain from automated querying* Do not send automated queries of any sort to Google's system: If you are conducting research on machine translation, optical character recognition or other areas where access to a large amount of text is helpful, please contact us. We encourage the use of public domain materials for these purposes and may be able to help.

+ *Maintain attribution* The Google "watermark" you see on each file is essential for informing people about this project and helping them find additional materials through Google Book Search. Please do not remove it.

+ *Keep it legal* Whatever your use, remember that you are responsible for ensuring that what you are doing is legal. Do not assume that just because we believe a book is in the public domain for users in the United States, that the work is also in the public domain for users in other countries. Whether a book is still in copyright varies from country to country, and we can't offer guidance on whether any specific use of any specific book is allowed. Please do not assume that a book's appearance in Google Book Search means it can be used in any manner anywhere in the world. Copyright infringement liability can be quite severe.

About Google Book Search

Google's mission is to organize the world's information and to make it universally accessible and useful. Google Book Search helps readers discover the world's books while helping authors and publishers reach new audiences. You can search through the full text of this book on the web at `http://books.google.com/`

Astron. Obs.
VK
569
.S96
1845
STORAGE
C2x1

A NEW METHOD OF FINDING A SHIP'S POSITION AT SEA

BY CAPT. THOMAS H. SUMNER.

Digitized by Google

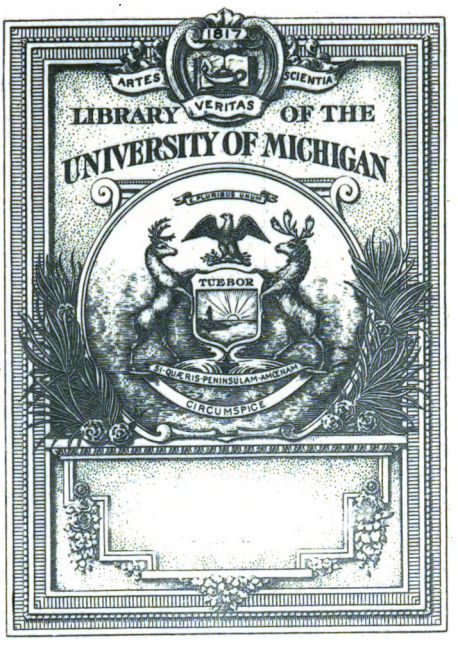

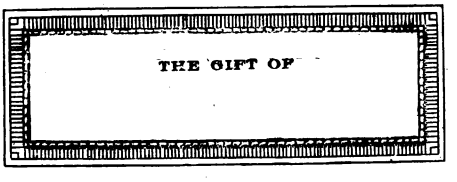

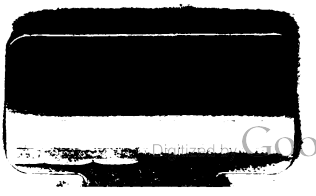

Digitized by Google

ASTRON. OBS.
V.K
569
.S96
1845

Presented to the
University of Michigan
by Fred Flynn
of Brooklyn, N.Y.
May, 1932

Digitized by Google

Digitized by Google

Digitized by Google

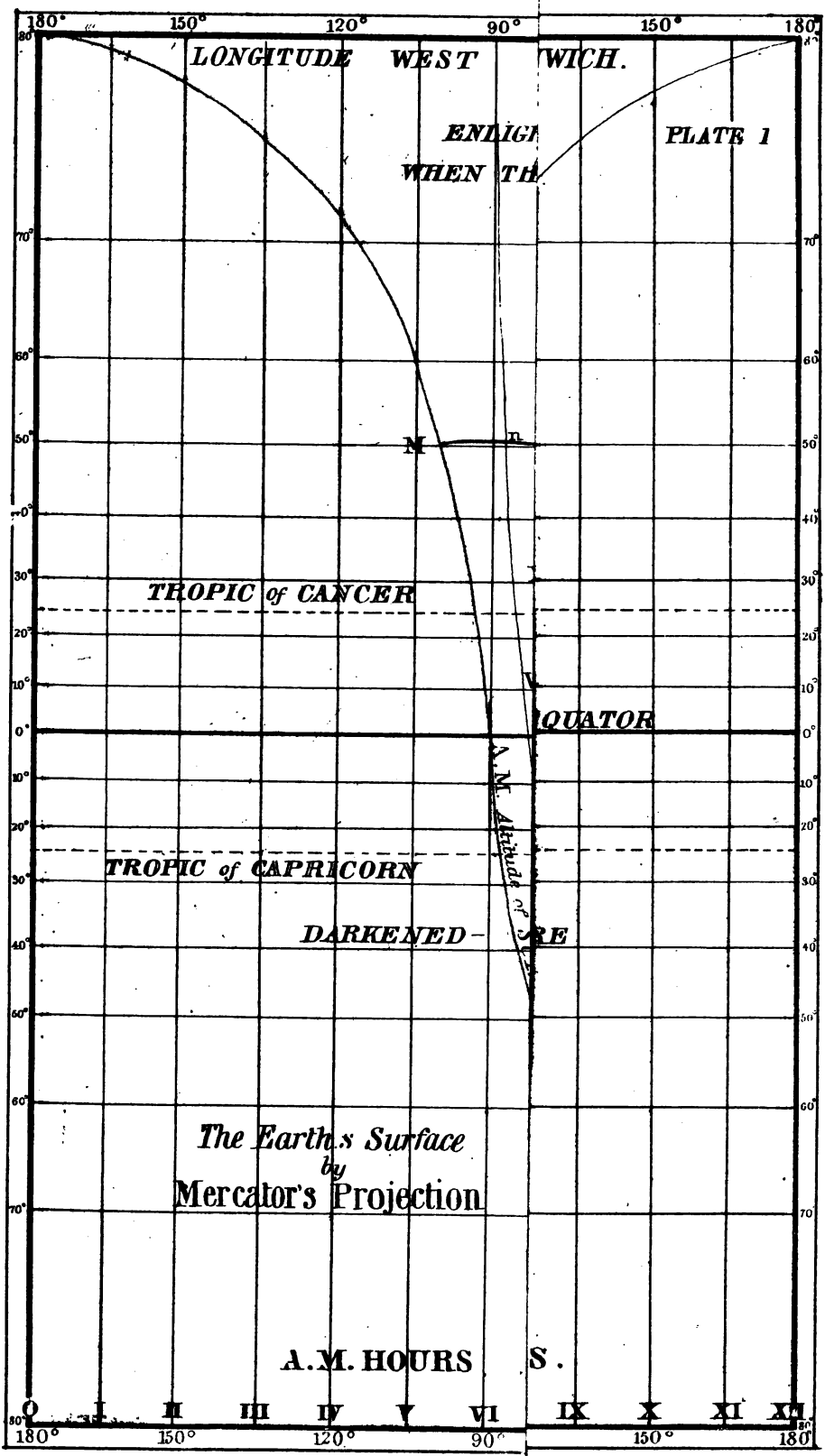

Digitized by Google

A

NEW AND ACCURATE METHOD

OF

FINDING A SHIP'S POSITION AT SEA,

BY PROJECTION ON MERCATOR'S CHART.

WHEN THE LATITUDE, LONGITUDE, AND APPARENT TIME AT THE SHIP ARE UNCERTAIN; ONE ALTITUDE OF THE SUN, WITH THE TRUE GREENWICH TIME, DETERMINES,

FIRST,

THE TRUE BEARING OF THE LAND;

SECONDLY,

THE ERRORS OF LONGITUDE BY CHRONOMETER,
CONSEQUENT TO ANY ERROR IN THE LATITUDE;

THIRDLY,

THE SUN'S TRUE AZIMUTH.

WHEN TWO ALTITUDES ARE OBSERVED, AND THE ELAPSED TIME NOTED, THE TRUE LATITUDE IS PROJECTED; AND IF THE TIMES BE NOTED BY CHRONOMETER, THE TRUE LONGITUDE IS ALSO PROJECTED AT THE SAME OPERATION.

The Principles of the Method being fully explained and illustrated by Problems, Examples, and Plates,

WITH RULES FOR PRACTICE, AND EXAMPLES FROM ACTUAL OBSERVATION.

BY CAPT. THOMAS H. SUMNER.

SECOND EDITION.

BOSTON:

PUBLISHED BY THOMAS GROOM, 82 STATE STREET.

1845.

Digitized by Google

LETTER FROM CAPTAIN W. HOMANS.

SHIP THOMAS H. PERKINS, *at Sea, Nov.* 9, 1844.

Messrs. Thomas Groom & Co.,

GENTLEMEN: Agreeably to promise, I now write my brother, G. B. Wellman, to pay you one dollar for the work of Captain Sumner, and never have I spent a dollar with more satisfaction, or ever got more value received for the money. I have now given the work a fair trial and am perfectly satisfied that it is the greatest discovery in the art of Navigation since the discovery of the longitude by chronometer, by Harrison, almost a century ago, and places Capt. Sumner, if not equal, certainly only second, to Nathl. Bowditch, and I look upon it as what has been for a long time among the desiderata of Navigation. It has been a source of anxiety to the Navigator, to ascertain his latitude when meridian altitudes could not be got. The ordinary modes of double altitudes for that purpose, published in most works on Navigation, have not always answered the purpose sufficiently to entitle them to implicit confidence. The work of Capt. Sumner has supplied a remedy; for any one with a reasonable knowledge of the rules and art of Navigation, can ascertain his latitude by following Capt. Sumner's rules, whether he has a chronometer or not; and if he has one, he can ascertain his latitude and longitude at any time when the sun, moon, or stars are visible, and there is a clear horizon. At the present time but few vessels are navigated without a chronometer, and Capt. Sumner has contributed to increase the value of that instrument four fold.

I have not the honor of a personal acquaintance with Capt. Sumner, but he is one of those web-foots whose acquaintance I should feel an edifying pleasure in cultivating; at the same time, I am proud to see and acknowledge that this discovery has been made by an American Ship Master. This work should be in the hand of every master of a vessel, aye, and mate too, and should be the never-failing accompaniment of Bowditch's great work on navigation.

Wishing you and Capt. Sumner every success in the sale of this work which its merits entitle it to,

I am your very humble and obedient servant,

WILLIAM HOMANS.

Entered according to Act of Congress, in the year 1843,
By CAPT. THOMAS H. SUMNER,
in the Clerk's Office of the District Court of the District of Massachusetts.

BOSTON.
S. N. DICKINSON & CO., PRINTERS,
52 WASHINGTON STREET.

Digitized by Google

Action Obs.
Gift
Mrs. Fred Fleyrne
6-15-1932

RECOMMENDATIONS.

The following letter from Professor PEIRCE, of Harvard College, Cambridge, to J. INGERSOLL BOWDITCH, Esq., President of the American Insurance Company, is published by permission.

CAMBRIDGE, 16th March, 1843.

My dear Bowditch, — I have examined Capt. Sumner's processes, and they are founded on perfectly correct pirnciples. I think his methods are especially valuable, because they require but one formula; and the Geometry is so simple and obvious, that it can easily be made intelligible to any man of good sense.

Yours, truly,

(Signed) BENJAMIN PEIRCE.

In obedience to a resolution adopted at the last stated meeting of the 'Naval Library and Institute,' in the following words, to wit: 'Resolved, That a Committee of three members be appointed to investigate the "New Method of Finding a Ship's Position at Sea," by Capt. Sumner, and report at the next meeting.'

The Committee respectfully submit the following REPORT:

We have carefully examined the subject referred to, and find that Capt. Sumner's method of ascertaining 'The Bearing of the Land; of finding a Ship's Position by projecting two of those Bearings, and of projecting the Sun's true Azimuth, &c.,' are all founded on spherical principles, as applied to Nautical Astronomy.

And your Committee is of opinion, that in practice, Capt. Sumner's discovery (for we can call it nothing else) will prove a useful auxiliary to the present knowledge of Navigators, and, as such, would recommend it to the attention of all persons interested in the promulgation and improvement of Nautical Science.

(Signed) JAMES ALDEN, Lt. U. S. Navy,
SAMUEL R. KNOX, Lt. U. S. Navy.
GEO. H. PREBLE, Passed Mid. U. S. N. } Committee.

'Naval Library and Institute,'
Navy Yard, Boston, April 30th, 1843.

I certify the above to be a true Copy of the Report,
(Copy.) (Signed) W. WHELAN, Recording Secretary.
Navy Yard, Boston, 9th May, 1843.

Extract from the Nautical Magazine, published monthly at London, of an extended notice of this work, by H. Raper, Lieut. R. N., attached to the Royal Hydrographical Department, and author of a celebrated practical treatise on Navigation:—

'This Method consists in a new use or application of a single altitude, observed for the longitude by chronometer; and as the suggestion is *highly ingenious and very useful when the ship is near the land*, it will be rendering a service to our seamen, few of whom can yet have heard of it, to make it known to them in the pages of the Nautical Magazine.'

'As this Method arises out of the employment of the chronometer, it may be said *greatly to enhance the utility of that instrument.*'

Digitized by Google

Letter from Captain STURGIS.

BOSTON, July 8th, 1843.

Captain Thomas H. Sumner, SIR: I have examined with much care and attention your 'New Method of Finding a Ship's Position at Sea,' which I consider a valuable discovery. I have no knowledge of any nautical work that directs otherwise than that observations be taken when the sun bears East or West; therefore I think your Method, when published, will be universally adopted by navigators. I therefore recommend it to all who feel an interest in the promotion of nautical science, as well as practical navigators. Wishing you every success in your undertaking,

I am, very respectfully, your obedient servant,

(Signed,) JOSIAH STURGIS,
Captain U. S. Revenue Cutter Hamilton.

Letter from Capt. ALEXANDER V. FRASER, R. S.

Bureau of Revenue Marine, Treasury Department,

WASHINGTON, Oct. 31, 1843.

Dear Sir:

I have tested the accuracy of your methods, by calculations made from my own observations, and cheerfully bear testimony that the system is based on correct principles, and the value enhanced by the extreme simplicity.

I am Sir, very respectfully, your obedient servant,

(Signed) ALEXANDER V. FRASER, Capt. Rev. Service.

Extract from letter of W. W. HUNTER, Lieutenant U. S. Navy.

WASHINGTON, Nov. 10, 1843.

Dear Sir:

Your book contains self-evident proof of the propriety of its title; exhibiting indeed with beautiful simplicity a new and accurate method of finding a ship's position at sea. * * * * * * * Esteeming your labors to have been highly serviceable and honorable to our country, I am, very respectfully,

Your obedient servant,

(Signed) W. W. HUNTER, Lieut. U. S. Navy.

Extract of a letter from M. F. MAURY, Lieut. U. S. Navy.

Hydrographical Office, WASHINGTON CITY, October 9, 1843.

SIR:— I have examined your book, entitled 'A New Method of Finding a Ship's Position at Sea,' and think highly of it. It may be considered as the commencement of a new era in practical navigation.

An order has been given to supply every ship in the navy with it.

Respectfully, your obedient servant,

(Signed) M. F. MAURY, Lt. U. S. Navy.

Extracts from letters of Lieut. MCLAUGHLIN, U. S. N.

WASHINGTON CITY, September 14, 1843.

DEAR SIR:— I have examined your book very carefully, and look upon it as one of the most valuable acquisitions which have been added recently to the science of Navigation. It has supplied a want which has long been felt by the navigator, and should be in the hands of every man intrusted with the care and safety of a ship.

I cannot too strongly recommend it as a work which should be in the library of every ship in the navy. I am, very respectfully,

Sir, your obliged and obedient servant,

(Signed) JOHN J. MCLAUGHLIN, Lt. U. S. N.

Digitized by Google

CONTENTS.

		Page.
	To the Reader,	7
I.	The Practice of this Method,	10
	To find the bearing of the land, &c., by one altitude, at any hour,	12
	To find the latitude and longitude by chronometer, by two altitudes, at one operation,	19
	To find the latitude by two altitudes; times noted by 'watch,'	25
	To find the latitude and longitude by chronometer without projecting,	29
	How to allow for possible errors of altitude,	30
	Table of the preference which obtains among any sets of double altitudes,	37
	Table and Rules, showing errors of longitude, &c.,	41
II.	The Advantages,	44
III.	The Principles,	50
	Explanation of them,	50
	To project a parallel of equal altitude in latitude,	54
	To project two parallels, in latitude, showing their intersections,	58
	To project a parallel, in latitude and longitude by chronometer, showing the bearing of the land,	60
	To project two parallels, in latitude and longitude by chronometer, showing the true latitude and longitude,	62
	To project two parallels on a terrestrial globe, showing the latitude,	63
	To project the change of station between two observations,	64
	To project the sun's azimuth,	65
	To project errors of longitude, &c.,	66
	To project any arc of a parallel of equal altitude,	67
	To project two arcs, change of station, the latitude, &c.,	68
IV.	Application to Moon, Planets, and Fixed Stars,	77
	The most simple method to do this, in most cases,	78
	Another process,	78
V.	Currents in the Gulf and Stream of Florida,	87

Digitized by Google

NOTICE TO THE SECOND EDITION.

The present edition has been carefully revised; a few pages have been introduced upon the preference which obtains among any sets of double altitudes which can be observed; the attention of the reader is therefore directed to the tables A, B, and C, with the remarks annexed.

Digitized by Google

TO THE READER.

It is not so much the object of this work to present the navigator with a new method of 'double altitudes,' as to afford him an accurate method of finding, by *one altitude of the sun*, taken at any hour of the day, with the chronometer time, the *true bearing of the land*, when the latitude, longitude, and time at the ship, are from any cause uncertain; and to place him on his guard, when near a dangerous coast, (and all coasts are dangerous when the latitude is not accurately known,) against those *errors of longitude by chronometer*, which arise from an *erroneous latitude* used in finding the apparent time at the ship; directing, particularly, his attention *to the fact*, as shown in these pages, that when the latitude is uncertain, a single altitude of the sun, at any time of day, when not less than say 7° high, is, with a good chronometer, as *useful as a* Meridian Observation for the latitude; and the errors above alluded to are rendered apparent.

When a single altitude is thus calculated, one half of the calculation of a double altitude is finished; and a second altitude furnishes all that can be desired, both latitude and longitude.

Hence, it seemed proper to explain 'double altitudes' by this method of projection; and it is believed, that it has the advantage over any other method, in the *simplicity* of the calculation, and in *the fact*, that ship-masters universally understand and daily practice the *numerical* calculation, namely, that of finding the apparent time at the ship, which is the only one used.

Digitized by Google

Many navigators, having taken morning sights for the chronometer, and supposing the observation useless without 'the latitude,' wait for the meridian observation, in order to deduce the longitude by chronometer; or, if the sun be obscured till afternoon, think a single altitude under such circumstances is of small value; and, by the common methods, with good reason; for then the latitude by dead reckoning from the preceding noon must, in general, be used to find the apparent time at the ship; and here is the source of error; because, 26 to 30 hours having probably elapsed, in such time the ship may have sailed from 250 to 300 miles; if two days have passed without a meridian observation or double altitudes, then from 400 to 500 miles, in frequent cases; and while sailing so far, a small current, with a small error in the log, (if one is used, but they are much out of fashion in these days,) will easily make an error in the distance of half a mile an hour, and of half a point in the course, and cause an error in the latitude by dead reckoning, and consequently in the longitude by chronometer.

Suppose the course and distance sailed by log to be east 300 miles, from a place in lat. 50° N., when the sun's declination is 23.28 S.; but, from accidental causes, the true course and distance sailed is 315 miles E. ½ N.; the difference of latitude is, in this case, 30.9 miles; but the dead reckoning gives 50° N. for the latitude to be used in finding the apparent time at the ship, if an observation should be now taken; but, with the *most favorable* altitude, (which is the one that is nearest to the east or west points, when observed,) the *least* error of longitude by chronometer is, in this instance, 1° 2′; and with other, *greater* altitudes, it may be *many times as much*, even when the chronometer is strictly accurate.

None of the works on navigation within the writer's knowledge, exemplify or even hint at this important source of error, but merely direct the observations to be taken when the sun bears as nearly '*east or west as possible*;' but it is *impossible*, for nearly seven months in the year, to observe the sun in the east or west points.

It is hoped, that the method by projection, which explains these errors, and renders a single altitude, taken at

Digitized by Google

any bearing of the sun, available, in a similar manner as a meridian observation, will supply a want which every practical navigator must have frequently experienced.

The latter pages of this treatise are intended to show the principles upon which this method depends; and the problems there solved, and the examples given, merely as illustrations of those principles, in the order in which they are explained.

It has been endeavored, to explain them in such a manner, that practical persons may be led, step by step, to the entire understanding of the theory.

Notwithstanding these might prove amply sufficient to enable many readers to put the principles in practice, yet, since there may be persons who might not be inclined to give them the attention necessary for this purpose, the more Practical Rules are first introduced, so that all such persons may proceed at once to the adoption of this method.

The present seems a fit opportunity to offer the chart relating to the currents in the Gulf of Mexico, at the end of the book; if it serve no better purpose, it will put the mariner on his guard, in those parts so fatal to the commercial interests.

Digitized by Google

I.

THE PRACTICE OF THE METHOD BY PROJECTION,

WITH EXAMPLES FROM ACTUAL OBSERVATION.

It is a direct inference from the principles herein stated, that there is, by the common rules, but *one* proper instant in one day, namely, when the sun bears north or south, at which a single observation to find the latitude can be taken with a correct result, unless *the apparent time* at the ship is accurately known.

And when *the latitude* is uncertain, that there are only *two* proper instants in *one* day, namely, when the sun bears *east*, and when he bears *west*, at which his altitude can be taken to find the longitude by chronometer with accuracy.

All deviations from these bearings of the sun, at the time of observation, (in such circumstances,) are attended with errors of latitude or longitude, proportional to the angular distance of the sun from these points; and these errors are frequently very great.

To remedy this difficulty, and render a *single altitude* of the sun, taken at any angle from the meridian, or from the east and west points, available, when the latitude and apparent time at the ship are, from accidental causes, uncertain, (the time of observation by chronometer being given,) the method of projection affords a *substitute* for a *parallel of latitude*, or a *meridian of longitude;* namely, a line *diagonal* to either of these, and which is called a PARALLEL OF EQUAL ALTITUDE; which, when projected on Mercator's chart, according to the rules given, shows a ship to be *on such projected line*, corresponding to the observed altitude; in a similar manner as a ship is found to be on a certain *parallel of latitude* by a *meridian observation;* consequently, the *projected line* shows the BEARING OF THE LAND, in a similar way as a parallel of latitude.

Digitized by Google

And likewise if two altitudes be observed, the times being noted by chronometer, and the *two lines* corresponding to the two altitudes, be projected as before, then both the true latitude and true longitude is found at the *intersection* of the two projected lines.

The following remarks are offered upon the corrections to be made at sea to any observed altitude of the sun, or other body.

These corrections are commonly four; namely, for parallax, semi-diameter, dip, and refraction.

The first two are found for the given time in the Nautical Almanac, and we have only to take them upon trust, as they are there laid down.

But with regard to the last two, accuracy depends, in a great degree, upon the observer himself.

With regard to dip, it should be remembered, that in the large ships built at the present day, the eye is so elevated (especially from the poop-deck) that the dip is fully 1′ more than has been usual.

With some persons it has become a habit always to add 12′ to an observed *meridian* altitude of the sun's lower limb, and from inattention they neglect to subtract the *proper* refraction, when the altitude is observed for the purpose of finding the apparent time for the longitude by chronometer: important errors will often occur, if the proper corrections be not strictly applied for different altitudes observed.

In all observations for the latitude by two altitudes, by whatever method, all these four corrections should be applied with particular care.

Both dip and refraction being *subtractive*, if the proper corrections be not attended to, the error will be so much the greater.

Digitized by Google

The following THREE PRACTICAL PROBLEMS are deduced from the principles of the method.

PROBLEM I.

The latitude, longitude, and apparent time being uncertain, and one altitude of the sun being observed, at any hour, when sufficiently high above the horizon, the chronometer time being noted, and declination given; it is required to project, on Mercator's chart, a line, diagonal to the parallels of latitude, and meridians of longitude, called a *parallel of equal altitude*, which shall pass through the position of the ship, and show by inspection,

1st. The bearing of the land.

2d. The errors of longitude by chronometer, to which the ship is subject for any in the latitude by dead reckoning.

3d. The sun's true azimuth.

RULE I.

1st. Select two latitudes, one of which is the next *degree* (without any odd minutes) *less*, and the other, the next *degree greater* than the latitude by dead reckoning.

2d. Find, in the usual way, the ship's longitude by chronometer, upon the supposition that she is in the *least* latitude assumed; and project this position on your chart in a point, which call A.

3d. Find, in the same way, the ship's position, supposing she is in the *greatest* assumed latitude; and project this position also on your chart in a point, which call A'.

4th. Join these two points by a straight line, which produce as far as necessary; this line is an arc of a '*parallel of equal altitude;*' and it passes through the *true* position of the ship; and whatever *land* it passes through, bears from the ship in the same direction as the line lies on the chart.

5th. The error of longitude by chronometer, at the time of observation, to which the ship is subject for an error of

Digitized by Google

latitude by dead reckoning, (when such latitude is used to find the apparent time,) amounting to *one* degree, is the difference of longitude between the points A and A′; for half a degree, half that difference of longitude, &c.

6th. Erect a perpendicular upon the projected straight line A A′, on that side next towards the sun, and it will be in the direction of the sun's true bearing; and the angle it makes with the meridian is the true azimuth.

NOTE.

It will thus appear, that the ship is *always* situated *on a line*, which is *perpendicular* to the sun's true bearing or azimuth. It follows, that the nearer an observation is taken *to noon*, the more accurately a bearing of the land is ascertained, by this method, if the CHRONOMETER ITSELF BE ERRONEOUS.

If the observation be taken *near to noon*, (at other times of day a mistake would not be likely to happen,) and the declination and latitude in are both of the *same* name; the sun bearing south in north latitude, or north in south latitude, neither of the two *assumed* latitudes must be *greater* than the *sum* of the *declination* and the *complement* of the sun's true central altitude; but if the sun bears north in north latitude, or south in south latitude, then neither of the assumed latitudes must be *less* than the *difference* between the *declination* and the *complement* of the sun's altitude; but when the declination and latitude in are of *different* names, neither assumed latitude must be *greater* than the *difference* between the *declination* and the *complement of the sun's altitude.*

It may happen, when the altitude is near noon, that the difference of longitude of the two points, A and A′, to be projected, may be greater than the extent in longitude of the '*particular*' chart in use; in such case, the points may be projected on a '*general*' chart; or, what would be better, assume two latitudes, which are less than one degree distant; namely, one on each side of the latitude by dead reckoning; the one being only ten miles *greater*, and the other only ten miles *less* than the latitude by account; or, if it be very near noon, five miles *greater* and *less*: taking care not to assume a latitude *too* great, or otherwise, as mentioned above.

Digitized by Google

With this restriction, it is immaterial what two neighboring latitudes are chosen, they may be either *both greater* or *both less*, or *one greater* and the *other less* than the latitude by dead reckoning; but, in general, when the sun is not very near the meridian, it will be more convenient to assume latitudes, one less, the other greater, and which have no odd minutes; because their logarithms are more readily taken from the tables, as they are always at the top or bottom of the page.

It is recommended to use Bowditch's third method, for finding the apparent time; because it is something shorter, and there is a convenience in placing the logarithms, which neither of his first two methods admit. The result, however, will be nearly the same, by either method. It is proper to mention, however, that method 1, (Bowditch,) has its own advantages, as explained in the Navigator.

Several of the logarithms used in finding *the apparent time* are the same for all the operations; which contributes to shorten the method, in particular when two altitudes are observed.

Example I.

On 17th December, 1837, sea account, a ship having run between 600 and 700 miles without any observation, and being near the land, the latitude by dead reckoning was 51° 37′ N., but supposed liable to error of 10 miles on either side, N. or S.; the altitude of the sun's lower limb, was 12° 02′ at about 10 1-2 A. M., the eye of the observer being 17 feet above the sea; the mean time at Greenwich, by chronometer, was $10^h\ 47^m\ 13^s$ A. M.

Required, the true bearing of the land: what error of longitude the ship was subject to, by chronometer, for the uncertainty of the latitude: the sun's true azimuth.

dip	− 4′ 3″	semi-dia.	+ 16′ 8″
refra.	− 4′ 23″	px	+ 8″
	— 8′ 26″		+ 16′ 16″
			− 8′ 26″
	correction of alt. obs'd.		+ 8′ 00″

Digitized by Google

Obs'd alt. ⊙ L. L.	12° 02′
Correction	+ 8′
True alt. ⊙ 's centre,	12° 10′

1st. The latitude by dead reckoning was 51° 37′ N.; the latitude the next degree *less*, without odd minutes, is 51° N.; and that, the next degree *greater*, is 52° N.

2d and 3d. Find the longitude of these two points, as follows:

⊙'s ALTITUDE 12° 10′.

For the point A in latitude 51° N.

Lat. 51°	N.		sec. 0.20113
Dec. 23 23	S.		sec. 0.03722
Sum 74 23	nat. cos.	26920	
⊙ Alt. 12 10	nat. sin.	21076	
H. M. S.	diff.	5844	log. 3.76671
1 43 59 from noon	= log rising	=	4.00506

12 hours.

10 16 01	app. time at ship.
— 3 37	equa. time.
10 12 24	mean time at ship.
10 47 13	do. by chro.
34 49	= 8° 42¼′ west of Greenwich.

For the point A′ in latitude 52° N.

Lat. 52°	N.		sec. 0.21066
Dec. 23 23	S.		sec. 0.03722
Sum 75 23	nat. cos.	25235	
⊙ Alt. 12 10	nat. sin.	21076	
H. M. S.	diff.	4159	log. 3.61899
1 28 28½ from noon	= log rising	=	3.86687

12 hours.

10 31 31½	app. time at ship.
— 3 37	equa. time.
10 27 54½	mean time at ship.
10 47 13	do. at Greenwich, by chro.
19 18½	= 4° 49½′ west long.

Digitized by Google

4th. On Mercator's chart, Plate III, project the point A in latitude 51° N., longitude, 8° 42½′ W.; and project the point A′ in latitude 52° N., longitude 4° 49½′ W.

5th. Join the points A and A′ by a straight line; and the ship's position is *upon* this line: which, referred to the compass, is found to tend E. N. E. true; and shows, that *Small's light* bears E. N. E. true from the ship.

6th. The error of longitude to which the ship was subject for 10 miles error of latitude, is 39 minutes, as projected.

7th. The sun's true azimuth is 2 points from south, or S. S. E., as projected.

NOTE.

The ship's true position, in latitude and longitude, at the time of this observation, is shown on the plate, as was actually proved by making Small's light. (See page 47.)

Had it been required to make Tusker light, a northerly course might have been shaped, and such a 'departure' made from the straight line A A′, (30 miles in this case,) as would have brought Tusker to bear E. N. E., and then the course again altered to E. N. E., and Tusker would have been made as shown on the plate. But, as the wind was S. E., when this observation was taken, it was preferable to make Small's light.

Thus, if the projected line does not pass through your port, a proper course may be shaped, by which you will ultimately make the land as desired, in the same manner as by a meridian observation; which may place you on a parallel of latitude, which passes some miles to the north or south of your port, or the head land you wish to make.

The accuracy of your work may be very readily *verified*, by assuming a *third* or intermediate latitude, (for instance, the latitude by dead reckoning,) and finding a *third* point, which project *as before;* then, if the three points be not very nearly *in the same straight line*, you have made a *mistake in your work*. It should be observed, however, that the middle point should in truth be a little out of the straight line, and in a direction *from the sun*, agreeably to the curves laid down in Plate I; but with

Digitized by Google

altitudes which are not great, it would be a very trifling difference from a straight line, indeed, scarcely perceptible.

When the line is projected, your latitude by dead reckoning gives your *approximate position in the line;* that is, your approximate *distance* from the head-land through which the line passes.

If the line runs parallel to a coast, it gives your *true* distance from such coast. In the above example, the true *distance* from the *Irish coast* is found to be 30 *miles;* and the true *bearing of Small's*, E. N. E.

Example II.

On 4th April, (sea account,) 1840, at about 1, P. M., the correct central altitude of the sun was 60° 32′, the mean time at Greenwich, by chronometer, $6^h\ 13^m\ 56^s$ P. M., the latitude, by dead reckoning was 32° 20′ N., but supposed liable to an error of 10 miles on either side.

Required, the true bearing of the land; the error of longitude by chronometer consequent to 10′ error of latitude; and the sun's true azimuth.

1st. The two latitudes to be used in the calculation, are 32° N., and 33° N.; one on each side of the latitude by dead reckoning.

2d and 3d. Find the longitudes of the points A and A′, having those two latitudes, as follows:

For the point A in latitude 32° *N.*

Lat.	32°	N.	- - -	sec. 0.07158
Dec.	5 35	N.	- - - -	sec. 0.00207
Diff.	26 25	nat. cos.	89558	
⊙ Alt.	60 32	nat. sin.	87064	
		diff.	2494	log, 3.39690
H.	M.	S.		
0	55	51	p. m. = log rising, =	3.47055
+	3	21	equa. time.	
0	59	12	mean time P. M. at ship.	
6	13	56	do. by chronometer.	
5	14	44	= 78° 41′ west longitude.	

Digitized by Google

For the point A′ in latitude 33° N.

Lat.	33°	N.	- - -	sec.	0.07641
Dec.	5 35	N.	- - - -	sec.	0.00207
Diff.	27 25	nat. cos.	88768		
⊙ Alt.	60 32	nat. sin.	87064		
	H. M. S.	diff.	1704	log,	3.23147
	0 46 23	P. M. = log rising,		=	3.30995
	+ 3 21	equa. time.			
	9 49 44	mean time P. M. at ship.			
	6 13 56	do.	chronometer.		
	5 24 12	= 81° 03′ west longitude.			

4th. On Mercator's chart, plate IV, project the point A, in latitude 32° N., longitude 78° 41′ W., and project the point A′, in latitude 33° N., longitude 81° 03′ W.

5th. Join the points A and A′, by a straight line; this line passes through the position of the ship; it is found to tend N. W. by W. ½ W., showing that the land, situated about 10 miles southwesterly, from Charleston light, bears N. W. by W. ½ W.

6th. The error of longitude by chronometer, to which the ship was subject from 10′ error of the latitude, is seen to be 24′ as set off on the plate.

7th. The sun's true azimuth is also projected; his bearing being nearly S. S. W. ½ W.

NOTE.

If it be required to make Charleston light, then sail northerly from the line AA′, until a departure from AA′ is made equal to about 10 miles, then haul up N. W. by W. ½ W. until the light is seen.

Digitized by Google

PROBLEM II.

Two correct altitudes of the sun's centre being observed; and the times of observation noted by chronometer; the declinations at both times, and the latitude by dead reckoning being given, and A. M. and P. M. times of observation noticed;

Required to project the two corresponding '*straight lines*' on Mercator's chart, showing their mutual intersection; the true latitude and the longitude by chronometer, and likewise the results of problem I.

RULE.

1st. Proceed as in problem I, to project the first straight line AA', which will correspond to the first observed altitude.

2d. Proceed in exactly the same manner, to project the second straight line, (using the very same *assumed latitudes*, as before,) and it will correspond to the second observation; name the two points in it, which have the assumed latitudes, B and B'; taking care to correct the declination, and likewise the equation of time, if any change has taken place in them between the observations.

3d. These two straight lines will be found *to intersect* each other, for the most part between the two assumed latitudes; if they do not intersect, then produce them to an intersection; and the intersected point will be in the latitude and longitude of the ship, if she has not changed her station between the observations.

4th. If the ship has changed her station; then, set off the distance sailed between the observations, in the direction of the true course made good, from *any* point in the straight line AA'; through the point set off, draw a straight line parallel to AA', and produce it until it intersects the straight line BB'; this new intersection with BB' is the position of the ship in latitude and longitude, at the time of the second observation, corrected for change of station.

5th. The other requisitions of the problem are explained in problem I.

Digitized by Google

NOTE.

It follows, from the principles hereafter explained, that all observations by double altitudes are, in general, to be preferred, when the observations are taken at right angles to each other, by compass.

If it be preferred, you may correct the *first* altitude for change of station by the usual methods, *before finding the apparent times;* and then the intersection of the two straight lines, AA′ and BB′ will be the ship's position in latitude and longitude at the time of *the second observation.*

EXAMPLE I.

January 1st, 1839. The sun's correct central altitude, A. M., was 14° 23′; the mean time at Greenwich, by chronometer, being $11^h\ 8^m\ 18^s$ A. M.; and when the time by chronometer was $0^h\ 6^m\ 44^s$ P. M., his correct central altitude was 19° 33′ A. M.; the latitude, by account, being 43° 45′ N.; between the observations the ship sailed only one mile N. E. by E.

Required the true latitude, and the longitude by chronometer, at the time of the second observation, &c.

1st. The two latitudes to be used are 43° N. and 44° N.

FOR THE FIRST ALTITUDE 14° 23′ A. M.

To find the point A. in latitude 43° *N.*

Lat.	43° N.	- - - -	sec. 0.13587
Dec.	23 03 S.	- - -	sec. 0.03613
Sum..	66 03	nat. cos.	40594
⊙Alt.	14 23	nat. sin.	24841
		diff.	15763 log, 4.19736
H. M. S.		log rising,	= 4.36936
2 40 3	=		
12 hours.			
9 19 57	app. time A. M. ship.		
+ 3 42	equa. time.		
9 23 39	mean time at ship.		
11 8 18	mean time chronometer.		
1 44 39	= 26° 9′ 45″ west longitude of A.		

Digitized by Google

To find the point A′, in latitude 44° N.

Lat.	44° N.	- - - -	sec. 0.14307
Dec.	23 03 S.	- - -	sec. 0.03613
Sum.	67 03	nat. cos.	38993
⊙Alt.	14 23	nat. sin.	24841
		diff.	14152 log, 4.15082
H.	M. S.		
2	32 40 =	log rising, =	4.33002
12 hours.			
9	27 20	app. time, A. M. at ship.	
+	3 42	equa. time.	
9	31 02	mean time at ship.	
11	08 18	do. chronometer.	
1	37 16 =	24° 19′ west longitude of A′.	

For the second altitude 19° 33′ A. M.

To find the point B, in latitude 43° N.

Lat.	43 .00 N.	- - - -	sec. 0.13587
Dec.	23 03 S.	- - -	sec. 0.03613
Sum.	66 03	nat. cos.	40594
⊙Alt.	19 33	nat. sin.	33463
		diff.	7131 log, 3.85315
H.	M. S.		
1	46 28 =	log rising =	4.02515
12 hours.			
10	13 32	app. time at ship, A. M.	
+	3 43	equa. time.	
10	17 15	mean time at ship, A. M.	
12	06 44	do. chronometer.	
1	49 29 =	27° 22′ 15″ west longitude of B.	

Digitized by Google

To find the point B′, in latitude 44° *N.*

Lat.	44	00 N.	- - - -	sec.	0.14307
Dec.	23	03 S.	- - - -	sec.	0.03613
Sum.	67	03	nat. cos.	38993	
⊙Alt.	19	33	nat. sin.	33463	
			diff.	5530	log, 3.74273
H.	M.	S.			
1	34	21	= log rising,	=	3.92193
12	hours.				
10	25	39	app. time at ship, A. M.		
+	3	43	equa. time.		
10	29	22	mean time at ship.		
12	06	44	do. chronometer.		
1	37	22	= 24° 20′ 30″ west longitude of B.		

2d. On Mercator's chart, plate V, project
- the point A, in latitude 43° N. longitude 26° 9′ 45″ west.
- the point A′ in latitude 44° N. longitude 24° 19′ west.

Join A and A′, and this line will pass through the position of the ship at the time of the first observation.

Project
- also the point B, in latitude 43° N. and in longitude 27° 22′ 15″ west.
- and the point B′ in latitude 44° N., and in longitude 24° 20′ 30″ west.

Join B and B′, and this line will pass through the position of the ship at the time of the second observation.

3d. It is seen that these two lines intersect each other in latitude 44° 1′ N., which is the true latitude, and the true longitude is 24° 18′ west.

4th. No correction is required for change of station, since the course sailed was *on the first* projected straight line AA′ tending N. E. by E., the same as the course sailed.

5th. The other requisitions of the example are projected as in problem I.

Example II.

On December 21st, 1838, the sun's correct central altitude was 20° 23′ A. M., when the chronometer time was

Digitized by Google

1^h 34^m P. M.; and his correct central altitude was 25° 10′ P. M., when the mean Greenwich time was 5^h 55^m 34^s P. M.; the latitude by account being 36° 08′ N., and between the observations the ship sailed E. N. E. ¾ E., 25 miles. Required to project, on Mercator's chart, the true latitude, and the longitude by chronometer, &c.

1st. The two latitudes to be assumed, less and greater, than 36° 8′ N. are 36° N. and 37° N. The declination is 23° 27′ S. and equation of time as under.

FOR THE FIRST ALTITUDE, 20° 23′ A. M.

For the point A in latitude 36° *N.*

Lat.	36 00 N.	- - - -	sec.	0.09204
Dec.	23 27 S.	- - -	sec.	0.03744
Sum.	59 27	nat. cos.	50829	
⊙Alt.	20 23	nat. sin.	34830	
H. M. S.		diff.	15999 log,	4.20409
2 33 20	=	log rising,	=	4.33357
12 hours.				
9 26 40	app. time at ship, A. M.			
— 1 40	equa. time.			
9 25 00	mean time at ship.			
13 34 00	do.	chronometer.		
4 09 00	=	62° 15′ west longitude of A.		

For the point A′, in latitude 37° *N.*

Lat.	37 00 N.	- - - -	sec.	0.09765
Dec.	23 27 S.	- - -	sec.	0.03744
Sum.	60 27	nat. cos.	49318	
⊙Alt.	20 23	nat. sin.	34830	
H. M. S.		diff.	14488 log,	4.16101
2 26 37	=	log rising,	=	4.29610
12 hours.				
9 33 23	app. time at ship, A. M.			
— 1 40	equation.			
9 31 43	mean time at ship.			
13 34 00	do.	by chronometer.		
4 02 17	=	60° 34¼′ west longitude of A′.		

Digitized by Google

FOR THE SECOND ALTITUDE, 25° 10′ P. M.

For the point B, in latitude 36° *N.*

Lat.	36	00	N.	sec.	0.09204
Dec.	23	27	S.	sec.	0.03744
Sum.	59	27	nat. cos.	50829	
⊙Alt.	25	10	nat. sin.	42525	
			diff.	8304	log, 3.91929
H.	M.	S.			
1	49	27	P. M. = log rising,	=	0.4877
—	1	30	equation time.		
1	47	57	mean time at ship, P. M.		
5	55	34	do. chronometer.		
4	07	37	= 61° 54¼′ west longitude of B.		

For the point B′, in latitude 37° *N.*

Lat.	37	00	N.	sec.	0.09765
Dec.	23	27	S.	sec.	0.03744
Sum.	60	27	nat. cos.	49318	
⊙Alt.	25	10	nat. sin.	42525	
			diff.	6793	log, 3.83206
H.	M.	S.			
1	39	28	= log rising,	=	3.96715
—	1	30	equation time.		
1	37	58	mean time at ship, P. M.		
5	55	34	do. chronometer.		
4	17	36	= 64° 24′ west longitude of B′.		

Project on Mercator's chart, plate VI, the four points A, A′, B, B′; in their respective latitudes and longitudes; and join A and A′; B and B′. If the ship had not changed her station, her true place would be at their intersection.

3d. But since this is not the case, from any point, as P, in the line AA′, set off the point D, 25 miles E. N. E. ½ E., the course and distance made good between the observations; through D, parallel to AA′, draw an indefinite straight line DB; the intersection of DB with BB′, is the ship's place at the second observation.

Digitized by Google

4th. The correction in miles of the *first altitude*, for change of station, is the perpendicular upon AA′ from B to C, equal to 10′ additive.

The true latitude is 36° N.; and the longitude, by chronometer, is 61° 54½′ west of Greenwich.

NOTE.

This observation was found to be accurate by meridian observation of the sun, as follows:

O's observed altitude was 30° 24′ bearing S.

	11	correction.
30°	35′	
59	25	zenith distance N.
23	27	declination S.
35	58	latitude N.

The ship's intermediate position between the observations was at noon.

PROBLEM III.

When two altitudes of the sun are observed, and the times are noted by a 'well-regulated watch,' for the elapsed time, the course and distance being given; and it is required to find the latitude only; we may consider, in such case, that the '*watch*' shows mean time at *any meridian*, which we may please to *assume;* in the same way as the '*chronometer*' shows mean time at the *known* meridian of Greenwich.

We may, then, assume, as a first meridian, that of Greenwich; and set the hands of the watch, previously to any observation, to the Greenwich mean time, *as nearly as we may be able to estimate it*, according to the supposed longitude of the ship by account. And then we may regard the '*watch*' as a '*chronometer.*'

Having done this, proceed *exactly as in the two ast examples*, to find the longitudes of A, A′, B, B′; and project them *by that rule*, and the *true latitude* will be found as before; but the longitude from Greenwich *will not* be found; since the watch shows only the *approximate* time at Greenwich.

Digitized by Google

But it is not absolutely necessary to set the hands of the watch to the Greenwich time, but merely see how much the watch is *fast*, or *slow*, of such estimated time, and allow for the error, accordingly. Thus it is quite immaterial what hour and minute the watch shows; it is only required, that the going of the watch between the observations is known to be accurate.

By assuming that the watch shows Greenwich time, the resulting longitudes will be such as correspond in degrees to the chart in use; otherwise, any other meridian might be assumed with equal success.

The above method will be found the most simple, and is to be always used when the sun is the object observed; but to familiarize the learner with the principles of this method, so that he can apply the method in all cases to the fixed stars and planets, the following example is given, in which the *four* points are projected by a different process; for the rule to do this, the reader will refer to problem VI. and Example (page 68.)

Example.

On the 4th of January, 1839, sea account, between 2 and 3 o'clock, P. M., the sun's true central altitudes were 15° 10′, and 10° 30′; and the elapsed time was $46^m\ 5^s$; the course and distance made good between the observations, being E. N. E., 6 miles; the latitude, by account, 46° 25′ N. Required the true latitude, at the time of the second observation; the correction of the first altitude for change of station; the sun's azimuth at each observation.

1st. The elapsed time is 46 m. 5 s. = 11° 31′ 15″, or the difference of longitude of Z′ West of Z.

2. The two latitudes to be assumed, will be 46° N. and 47° N.

3d. Find the apparent times '*from noon*,' as follows:

Digitized by Google

FOR THE FIRST ALTITUDE, 15° 10′ P. M.

For the point A, in latitude 46° *N.*

Lat. 46 00 N. - - - sec. 0.15823
Dec. 22 51½ S. - - - - sec. 0.03552
Sum. 68 51½ nat. cos. 36068
⊙Alt. 15 10 nat. sin. 26163
H. M. S. diff. - 9905 log, 3.99585
2 9 12 = log rising, = 4.18960
2 9·12 = 32° 18′ diff. longitude east of Z, because P. M., of a point A, in latitude 46° N.

For the point A′ in latitude 47° *N.*

Lat. 47 00 N. - - - sec. 0.16622
Dec. 22 51½ S. - - - - sec. 0.03552
Sum. 69 51½ nat. cos. 34435
⊙Alt. 15 10 nat. sin. 26163
H. M. S. diff. - 8272 log, 3.91761
1 58 55 = log rising, = 4.11935
1 58 55 = 29° 43¾′ diff. longitude east of Z, because P. M., of a point A′ in latitude 47° N.

FOR THE SECOND ALTITUDE, 10° 30′ P. M.

For the point B, in latitude 46° *N.*

Lat. 46 00 N. - - - sec. 0.15823
Dec. 22 51½ S. - - - - sec. 0.03552
Sum. 68 51½ nat. cos. 36068
⊙Alt. 10 30 nat. sin. 18224
H. M. S. diff. - 17844 log, 4.25149
2 55 22 = log rising, = 4.44524
2 55 22 = 43° 50½′ diff. longitude east of Z′, because P. M., of a point B in latitude 46° N.

Digitized by Google

For the point B′, in latitude 47° N.

Lat. 47 00 N.	- - -		sec. 0.16622
Dec. 22 51½ S.	- - - -		sec. 0.03552
Sum. 69 51½	nat. cos. 34435		
⊙Alt. 10 30	nat. sin. 18224		
H. M. S.	diff. - 16211	log,	4.20981
2 48 23 =	log rising,	=	4.41155

2 48 23 = 42° 5¼′ diff. longitude east of Z′, because P. M., of a point B′, in latitude 47° N.

A in lat. 46 N., is east of Z,	32° 18′
Z is east of Z′, - - - - - -	11 31¼
A is, also, east of Z′, - - =	43° 49¼′

Project A, on the chart, plate VII., in latitude 46° N., and in any longitude; and mark it, *east of Z*, 32° 18′; and *east of Z′*, 43° 49¼′.

A′, in lat. 47° N., is east of Z	29° 43¾′
A 46° N., is east of Z	32 18
A′ is west of A - - - =	2 34¼

Project A′, in lat. 47° N., and 2° 34¼′ west of A; mark it 29° 43¾′ *east of Z′*.

A is east of Z′ - - - - =	43° 49¼′
B in lat. 46° N. is east of Z′	42 50¼
B is east of A - - - - =	1¼

Project B′, in lat. 46° N., 1¼′ east of A, and mark it 43° 50¼′ *east of Z′*.

A is east of Z′ - - - -	43 49¼′
B′, in lat. 47° N., is east of Z′	42 5¾
B′ is west of A - - - =	1 43¼

Project B′, in lat. 47° N., 1° 43¼′ west of A, and mark it 42° 5¾′ *east of Z′*.

5th. Join by straight lines A, A′, and B, B′, from any point, as P, in AA′, set off the point D, with the course and distance, E. N. E., 6 miles; through D, draw a line parallel to AA′, and its intersection with BB′, is the true

Digitized by Google

latitude at the time of the second observation, namely, 46° 15½′ N.

6th. The correction of the first altitude is 5 miles subtractive, as projected by the rule; the bearings of the sun are also projected.

If the sun's true azimuth could be always *exactly observed*, it would be necessary to find the longitude of *only one* point in each straight line; and that might be found by using the latitude by dead reckoning to get the apparent time; for then, if a line be drawn on the chart, through this point in the *exact* direction of the sun; and a second line be drawn through the same point, and perpendicular to the first line; it would show the bearing of the land &c. as before; and if two altitudes were taken, and the lines thus projected, the latitude and longitude would be very easily found — but unless under very favorable circumstances this cannot be done with sufficient accuracy; and the only *safe* way is to find the position of two points in each line as directed.

It is evident, that, having found the position in latitude and longitude of the two points in either straight line, the bearing of one from the other is easily found *by case I. Mercator's sailing;* and thence the bearing of the land; but still it is preferable to project them.

The latitude may be found by this method of calculation from two altitudes, *without projecting the straight lines*, as follows. Note the elapsed time by watch or chronometer, (in example, problem III, this was $46^m\ 5^s$;) with both altitudes, find the apparent times from noon, using either *one* of the two assumed latitudes; take the difference of these times; (in example, problem III, the times for ⊙'s altitude, 15° 10′ and 10° 30′, in assumed latitude 46°, were $2^h\ 9^m\ 12^s$ and $2^h\ 55^m\ 22^s$; their difference is $46^m\ 16^s$;) which difference of times ($46^m\ 10^s$) *would have been the elapsed time*, if the true latitude had been 46°; but $46^m\ 10^s$ is 5^s *greater* than the elapsed time *noted* by watch; do likewise with both altitudes, using the other assumed latitude; (we have, example problem III, for latitude 47°, the times $1^h\ 58^m\ 55^s$, and $2^h\ 48\ 23^s$; their difference is $49^m\ 28^s$,) which difference would have been

Digitized by Google

the elapsed time if the true latitude had been 47°; but $49^m\ 28^s$ is $3^m\ 23^s$ *greater* than the elapsed time noted, ($46^m\ 5^s$; therefore, in this example, the further north we assume a latitude the greater we make the error in the elapsed time; and we may already see that the true latitude is not so much as 46° N. Now take again the difference between $46^m\ 10^s$, (the elapsed time if the latitude be 56°,) and $49^m\ 28^s$, (the elapsed time if the latitude be 47°;) this difference is $3^m\ 18^s$; then make this proportion; if $3^m\ 18^s$ is the error of elapsed time, caused by an error of latitude of 1°, what is the error of latitude (to be subtracted from 46° N.) caused by an error of 5^s of elapsed time?

By proportional logarithms (Table XXII, Bowditch,) we have

As - - -	$3^m\ 18^s$	ar. co.	log 8.2632
is to - - -	1°		.4771
so is - -	$0^m\ 5^s$		3.3345
To the ans.	1′ 31″		log. 2.0748
	46° 0′ 00″		
	45° 58′ 29″	latitude of the intersection of AA′ and BB′.	

By reference to plate VII, we see that the straight lines, AA′ BB′, intersect each other a little to the *south* of latitude 46°; *no change of station* being allowed; to find the *true* latitude, according to the example, we should have *first* corrected the first altitude for change of station; and then proceeded as above. The longitude also may be found when the times are noted by Chronometer, by a similar process.

What are the errors to which observations calculated by the method of projection are subject?

The only calculation used, is that for finding the apparent time. For this purpose, three things are necessary; the latitude, the declination, and the altitude; if all these be accurate, we have the true apparent time; and if the chronometer be right, we have no error; now, by assuming the latitudes used, no error exists in this element; the de-

Digitized by Google

clination also may be considered accurate; and the only remaining source of error is in the altitude observed; and excluding such as may arise from inaccuracy of noting the times, of adjustment, reading off, &c., which ordinary care will prevent, this error is usually less than two miles, and is due to irregularity of refraction, and the occasional unfitness of the horizon; but we may find, that by the common rules and with a single altitude, this will make a large error in the ship's *position* by chronometer, as the sun approaches the meridian; because the resulting time is applied *directly* to finding the longitude. When the sun bears east or west, the error of time will be exactly equal to the error of altitude turned into time; but as the sun approaches the meridian, the error of time continually increases, thus causing continually increasing errors in the *position* by chronometer.

But by this method, the error in *a bearing of the land, by a single altitude, at any hour*, is always *equal* to the error of altitude; as when a meridian observation is observed one mile too great, the bearing of the land in the parallel of latitude resulting, is only one mile erroneous. There is no reason, then, why we may not observe a single altitude of the sun at *any* bearing, to find a bearing of the land by this method.

It was remarked that, as a general rule, any two observations for '*double altitudes*' are to be preferred, when taken at right angles to each other in azimuth; and this is because a small error in either or both altitudes observed, or the times noted, will never occasion, in such cases, but a trifling error in the position on the earth's surface; indeed the position will then be determined within a space on the earth's surface the least possible, having any given error of altitudes or times; but the same errors of altitudes or times will always occasion greater errors of position, when the difference of azimuth between the two observations is either greater or less than eight points.

But at the same time 'the latitude' may be determined *in many cases*, with greater accuracy, if the two observations have either a less or greater difference of azimuth than eight points, than when they are taken at right angles; but such cases are usually most unfavorable for finding 'the longitude,' or the apparent time; again, 'the longi-

Digitized by Google

tude' may also be determined, *in many cases*, in a similar manner; but such cases are usually most unfavorable for finding 'the latitude.'

The considerations which follow will show *the degree of confidence* that may be placed in every set of double altitudes that can be observed; and the particular advantages of each: and, in general, show first, that, towards *whatever* point of the compass the *mean* between both the azimuths is directed, the *same* difference of azimuth, and also its supplement, will give the position within the *same* limits in space on the earth's surface; but that *different* differences of azimuth will give *different* limits in space, and these limits will be the greater, the more the difference of azimuth varies from eight points; and secondly, that the value of any set of double altitudes, to determine 'a latitude' or 'a longitude,' depends jointly upon the difference of azimuth and the azimuths themselves, at which the observations were made; or, for convenience of explanation and reference, upon the *difference*, and upon the *mean* of the azimuths.

These remarks, it will be distinctly kept in mind, are not peculiar to this method alone, but apply equally to all methods of double altitudes, even to the common daily method of a meridian altitude, and an east or west sight for the longitude, which is only a particular case of double altitudes. If all errors were expunged from the declinations, the altitudes, and the times noted and the logarithms in the tables were carried to a sufficient number of places, no error would exist in either 'the latitude,' or 'the longitude,' or the position in space, at whatever azimuths two altitudes were observed; and it is the liability to error in some of these quantities which establishes a preference among different sets of observations. The estimate of the effect of such errors therefore becomes important; and among the quantities mentioned it will be necessary only to consider the errors of the altitudes and of the times.

Every altitude observed is liable to three conditions; for it will be either exact, or too great, or too small; and the changes of position, resulting from *two* altitudes, which are each liable to *three* changes, will be *nine*, according to the following

Digitized by Google

List of Conditions.

Position 1. When both altitudes are exact.
2. When both altitudes are too great.
3. When both altitudes are too small.
4. When the first is exact, but the second too great.
5. When the first is exact, but the second too small.
6. When the second is exact, but the first too great.
7. When the second is exact, but the first too small.
8. When the first is too great, but the second too small.
9. When the second is too great, but the first too small.

The manner in which these conditions affect the position in space will be seen in the following diagrams, in all of which the error of the altitudes is one mile. The projected lines, AA′, BB′, fig. 1, are supposed to be those resulting from two altitudes which were *exactly* observed, when the object bore east and south, as in the common method of finding the ship's place; here the *difference* of azimuth is eight points, and the *mean* azimuth, S E, or four points; the position in this case is at their intersection at the numeral 1; but if *both* altitudes were observed one mile *too great*, then the line AA′ must be removed westward one nautical mile to the position of the line *aa′*; and the line BB′ must be removed one mile northward to the position of the line *bb′*; then the ship's position will be at their intersection at the numeral 2; that is, the error of 'latitude' will be one mile, and that of 'longitude' one nautical mile; but the error or limit of position in space on the earth's surface is the distance between the intersections at the numerals 1 and 2; or by the traverse table 1.41 miles of distance, and on a four point course.

Fig. 1.

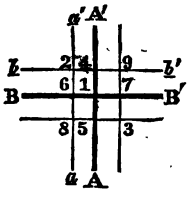

The numerals at the other intersections correspond with those of the different positions annexed to the above list of conditions; some of these affect only 'the latitude,' as at 4 and 5; some only 'the longitude,' as at 6 and 7; and some both, as at 2, 3, 8 and 9. Whence it is seen that the error of position in space, 1.41 miles, takes place in the

Digitized by Google

direction of (S. E. and N. W.,) and at right angles to [N. E. and S. W.,] the *mean* azimuth, [S. E.;] and that these limits in these directions are represented by the diagonals of the parallelogram 2, 9, 3, 8; for if we know not whether the error of the altitudes be too great or too small, we cannot be sure of the position in space on the earth's surface within the space enclosed by this parallelogram; the *extreme* error in space is then represented by a parallelogram, whose diagonals are each 2.82 miles in length, and which lie, the one in the direction of the *mean* azimuth, and the other at right angles to it; the parallelogram being a square when the difference of azimuth is a right angle, the diagonals will be equal. And we may infer that the bearings of the land in the directions of the diagonals are not so well determined by 0.82 miles as in the directions at right angles to each azimuth respectively; that is, the observation is the most favorable for determining 'the latitude' and 'the longitude;' and we shall also see that position in space is as favorably determined, whatever the *mean* azimuth may be, the difference of azimuth being eight points.

Suppose the object to have been observed when bearing S. E. and S. W., fig. 2. Here the difference of azimuth is eight points, as before, but the *mean* azimuth is south, or 0 points; but 'the latitude' is affected as at 2 and 3, instead of at 4 and 5, as in fig. 1; the longitude at 8 and 9 instead of at 6 and 7; and both at 4, 5, 6, 7, instead of at 2, 3, 8, 9; but the *extreme* error of position on the earth's surface is the same as before, 2.82 miles; in the direction of the *mean* azimuth, N. and S.; and the same quantity, at right angles to it, E. or W.; hence we infer that the former case, fig. 1 is more favorable to find the latitude or the longitude than fig. 2, by 0.82 miles (*extreme*); although the position in space is equally well determined in both figures; the alteration in the direction of the mean azimuth having no effect on the parallelogram, except to turn it about on its centre; and it is obvious that the bearings of the land at right angles to each azimuth respectively, that is, in N. W. and S. E., and S. W. and N. E. directions, is more favorably found, by 0.82 miles, than in the direction of, and at right angles to, the mean azimuth; that is, in this case, than in E. and W., or N.

Fig. 2.

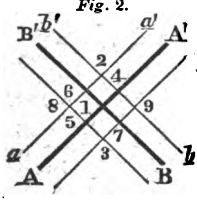

Digitized by Google

and S. directions; we see here, in some degree, the dependence of the accuracy of the latitude and the longitude upon the direction of the *mean* azimuth, the *difference* of azimuth being the same in both figs. 1 and 2.

But an error of one mile in the altitudes will occasion a greater error of position in space on the earth's surface, and will affect the latitude and the longitude in various degrees, when the *difference* of azimuth is greater or less than eight points.

Let AA′, fig. 3, be the line resulting when the object bears E. ½ N.; and BB′ that resulting when it bears E. ½ S.; which is a *difference* of azimuth of one point, and the *mean* azimuth is eight points, or east; then when *both* altitudes are *exact*, the position will be at the numeral 1; but if *both* altitudes are *too great*, it will be at 2; being an error of 1.01 nautical miles in the direction of the mean azimuth, or E. and W.; and when the intersection is at 8 or 9, the error of the position will be 10.20 miles at right angles to the mean azimuth; thus will the *extreme* error of latitude be equal to one, and the *extreme* error of longitnde be equal to the other diagonal of the parallelogram, 9, 2, 8, 3, which includes the position of the ship, the mean azimuth being east; and the error of position in space is also increased; here the *greatest* diagonal is at right angles to the mean azimuth, and the *least* in the direction of it; the longitude is found within the *extreme* error of 2.02 nautical miles, and the latitude within the *extreme* error of 20.40 miles.

Fig. 3.

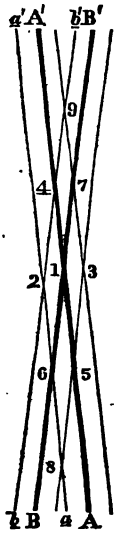

If using the same fig. 3, we suppose BB′ to result from the first altitude, the object bearing E. ½ S., and AA′ to result when it bore W. ½ S., that is, with a difference of azimuth 15 points, [the supplement of one point] and a mean azimuth, south, or 0 points, the figures of reference only being changed in the diagram, the same effect will be produced, as regards the size and situation of the parallelogram; but the *greatest* diagonal is now in the direction of the mean azimuth, and the *least* at right angles to it.

It will be easy to see that if fig. 3 be turned about its centre until the mean azimuth is south, the azimuths

Digitized by Google

being only *one* point, as before, that the greatest error will be at right angles to the mean azimuth, and that the latitude will then be found within an *extreme* error of 2.02 miles: but that the position in space, on the earth's surface, is equally well found as when the *mean* azimuth is east, or eight points.

Intermediate directions of the *mean* azimuth will equally well determine the position in space, having the same difference of azimuth, but the latitude and longitude will suffer a change.

Thus, in fig. 4, the object is supposed to be observed, bearing S. E. ½ E., and S. E. b E. ½ E., or with a difference of azimuth of one point, and a *mean* azimuth, S. E. by E. or 5 points; the change in the mean azimuth does not affect the size of the parallelogram, but only its position, turning it on a centre, through three points of the compass, or from east to S. E. by E.; but the latitude and the longitude are both affected; half the *extreme* error being represented in the former, by the line L. 9; and in the latter by the line L. 1; the *extreme* errors being 16.96 miles latitude, and 11.34 nautical miles longitude; but we have, notwithstanding, the bearing of the land in the directions of N. E. b N., S. W. b S., or at right angles to the *mean* azimuth, determined within the *extreme* limit of only 2.02 miles; but in the direction of the *mean* azimuth, or S. E. b E., N. W. b W. with an error of 20.40 miles. So on the whole, the observation is just as good as in fig. 3, notwithstanding the errors of latitude and longitude are so considerable.

Fig. 4.

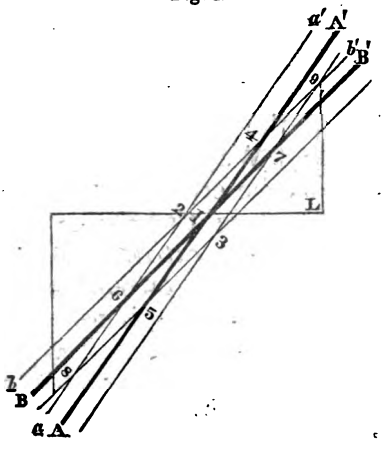

Altitudes with other differences of azimuths, and other *mean* azimuths, are subject to similar laws. But whatever *two* observations are made, a bearing of the land may always be found which shall be subject to no greater extreme error than 2.82 miles for one mile error of the altitudes.

To exhibit at one view the degrees of preference which

Digitized by Google

obtains among any set of double altitudes, the following tables are constructed upon the above principles. If the difference of azimuth be found in the LEFT hand column, [Col. L.] then the *mean* azimuth must be sought at the head or foot of the double columns, among those which are marked with the letter L.; and if found at the top, the precepts 'Lat. Dep.' must be read at the top; otherwise at the bottom; and similarly with regard to the RIGHT hand column [Col. R.;] the tabular numbers show in nautical miles the error of latitude and of departure, [to be converted into difference of longitude as usual,] consequent to an error of one mile in the observed altitudes; this gives the error reckoned from the *central* point of the parallelogram formed; or from the intersection given by the observation; but if it be uncertain whether the error of altitude be too great or too small, then the *extreme* error will be double the tabular numbers. An error of two miles in the altitudes will be double that of one, and so on.

The tabular numbers which are underscored, show that one of the altitudes must have been observed either in the meridian or the prime vertical, the error being equal to the error of altitude allowed, 1.00 mile.

TABLE A.

Col. L.	MEAN AZIMUTH IN POINTS.										*Col. R.*
Difference of azimuth in points.	0. L	8. R	1. L	7 R	2. L	6. R	3. L	5 R	4. L	4. R	Difference of azimuth in points.
	Lat.	Dep.	Lat.	Dep.	Lat.	Dep.	Lat.	Dep.	Lat.	Dep.	
1	1.01	10.20	1.99	10.00	3.90	9.42	5 67	8.48	7.21	7.21	15
2	1.02	5.12	1 00	5.02	1.96	4.73	2.84	4.26	3.62	3.62	14
3	1.05	3.44	1.03	3.37	1.32	3.18	1.91	2.86	2.43	2.43	13
4	1.08	2.61	1.06	2.56	1.00	2.41	1.45	2.17	1.85	1.85	12
5	1.13	2.12	1.11	2.08	1.04	1.96	1.18	1.76	1.50	1.50	11
6	1.20	1.80	1.18	1.77	1.11	1.66	1.00	1.50	1.27	1.27	10
7	1.20	1.57	1.27	1.54	1.19	1.45	1.07	1.31	1.11	1.11	9
8	1.41	1.41	1.39	1.39	1.31	1.31	1.18	1.18	1.00	1.00	8
	Dep.	Lat.	Dep.	Lat.	Dep.	Lat.	Dep.	Lat.	Dep.	Lat.	
Difference of azimuth in points.	8. L	0. R	7. L	1. R	6. L	2. R	5. L	3. R	4. L	4. R	Difference of azimuth in points.
	MEAN AZIMUTH IN POINTS.										

The order of preference which obtains among the different sets of double altitudes, to determine a latitude or a

Digitized by Google

longitude, is evident by a careful inspection of the tabular numbers of table A; but although the tabular numbers abreast of any particular difference of azimuth, differ considerably, yet all the numbers in the same line are equally well suited to determine the position in space as shown by referring to table B.

Table B. contains the same numbers at the first column of table A, and the tabular numbers represent, in nautical miles, half the length of the diagonals of the parallelograms formed, which include the position in space on the earth's surface, the errors of altitudes being one mile; one of these diagonals being in the direction of any mean azimuth, and the other at right angles to it; the tabular numbers must of course be doubled to find the *extreme* error.

The precepts at the top of columns must be read, if the difference of azimuth be found on the left of the table; otherwise, at the bottom.

Table C. shows the increase of the *extreme* area within which the ship is situated, according as the difference of azimuth varies from a right angle, the error of altitude being one mile.

TABLE B. TABLE C.

Difference of azimuth in points.	Half the length of the diagonals of the parallelograms formed, showing, in nautical miles, for one mile error of altitudes, the error of position in space,		Diff. of azimuth.	Value of the areas of the parallelograms in square nautical miles.	Diff. of azimuth.
	in the direction of any mean azimuth.	at right angles to any mean azimuth.			
1	1.01	10.20	15	1 20.604	15
2	1.02	5.12	14	2 10.449	14
3	1.05	3.44	13	3 7.224	13
4	1.08	2.61	12	4 5.638	12
5	1.13	2.12	11	5 4.791	11
6	1.20	1.80	10	6 4.320	10
7	1.29	1.57	9	7 4 050	9
8	1.41	1.41	8	8 4.000	8
	At right angles to any mean azimuth.	In the direction of any mean azimuth.	Diff of azimuth in points.		

The inspection of tables B and C shows that, when the difference of azimuth is eight points, the position in space is most correctly determined; and table B also shows,

Digitized by Google

that, whatever two observations are made, that *one* of the diagonals will always be not greater than twice 1.41 miles; consequently that the bearing of land at right angles to this diagonal will be found within the *extreme* error of not more than 2.82 miles.

Tables B and C show, generally, that the limits of a ship's position depend wholly on the *difference* of azimuth; while table A shows that the accuracy of 'a latitude' or 'a longitude,' found by double altitudes, depends *jointly* on the *difference*, and on the *mean*, of the azimuths.

The error of latitude, or of longitude, or of the position in space consequent to an error in either or both the *times* noted, is exactly analogous to the errors just stated; and the same ground might be gone over, a list of conditions and similar tables formed, but this will be unnecessary; it may be stated, however, that the number of changes of position resulting from *two* altitudes and *two* times noted, which *four* quantities are each liable to *three* conditions, will be 81; but if the effect of an error of the time be equal to the effect of the error of altitude, this number will be reduced to 25; for then the errors will frequently cancel each other; by supposing the error of time changes the position of a projected line just as much as the error of altitude, we may represent the various changes, by drawing a line parallel to each of the sides of any of the parallelograms in the preceding diagrams, and at a distance from them of one mile; the parallelograms will then be *four* times their former size, and their diagonals *double* their former length, and we shall have the combined result of an error of time and of altitude by *doubling* the tabular number of tables A and B, and the *extreme* error by multiplying them by 4.

But it must be considered that, with a good time-keeper, the error of noting the times, together with any error of its performance during the elapsed time, must always be very small, perhaps not a second, particularly if attention be paid to apply the proportional part of its daily rate to the part of a day which has elapsed between the observations and an error of so small an amount will make no error of consequence except in the most *extreme* cases.

An absolute error in the chronometer will of course occasion an absolute change in the longitude; changing the whole parallelogram to a more eastern or western position

Digitized by Google

only; and this error must not be confounded with the '*difference* of longitude' occasioned by the error in the times noted, or altitudes observed; which are *relative* only to the central point of the parallelogram, which is at the intersection given by the observations.

But, after all, we may readily find, by *inspection* of any observation projected on the chart, the small limit of error to which it is liable; for by drawing a parallel line on each side of each projected 'parallel of equal altitude,' at the *greatest* distance from it that it is possible for the altitude to be erroneous, we shall have the *extreme* limit of error; and thus know what degree of confidence can be placed in every altitude observed; and hence in the bearing of the land, by one altitude; and in the latitude, or in the longitude by chronometer; or in the position, when two altitudes are observed.

That the navigator may see, at a glance, the errors of longitude by *a strictly accurate chronometer*, to which he is subject, for an error of the latitude used in finding the apparent time of the ship, when he cannot get sights of the sun at the time he bears E. or W., the following Table is calculated upon the principles of this method.

This will serve as a guide to know the *greatest* error of longitude consequent to *any* observed altitude; but then the *greatest possible* error of latitude must be allowed for this purpose.

But since the *real error* of latitude *cannot* be known by *one* altitude, (except it be a meridian observation when the error of latitude is equal to 0,) it will still be necessary 'to project' the observation as directed, finding thereby the *bearing of the land*, in a similar way as by meridian observation.

Digitized by Google

TABLE D,

Showing the errors of longitude by chronometer, in nautical miles, [60 to a degree of latitude,] for *one mile* error of the latitude used in finding the apparent time at the ship; when the sun *does not* bear true E. or W. at the time of observation.

⊙'s TRUE AMPLITUDE* IN POINTS.	ERROR IN NAUTICAL MILES.	⊙'s TRUE AMPLITUDE IN POINTS.	ERROR IN NAUTICAL MILES.
¼	0.049	4¼	1.103
½	0.098	4½	1.219
¾	0.148	4¾	1.348
1	0.199	5	1.497
1¼	0.250	5¼	1.669
1½	0.303	5½	1.871
1¾	0.358	5¾	2.115
2	0.414	6	2.414
2¼	0.473	6¼	2.795
2½	0.535	6½	3.297
2¾	0.599	6¾	3.992
3	0.668	7	5.027
3¼	0.742	7¼	6.741
3½	0.821	7½	10.153
3¾	0.907	7¾	20.356
4	1.000	8	Infinite.

To know if this error of longitude be to the E. or W. of the *true* longitude, the following Rules are given, and will be found to include every case.

I.

If the ⊙ bear { southerly when in N. latitude, / northerly when in S. latitude, }

And the time of observation be A. M., then, if the *latitude*, used in finding the apparent time, be { *greater* / *less* } than the *true* latitude, the longitude will be too far { *East.* / *West.* }

But if the time of observation be P. M., then if the *latitude*, used in finding the apparent time, be { *greater* / *less* } than the *true* latitude, the longitude will be too far { *West.* / *East.* }

* By amplitude is here to be understood the angular distance of the sun from the prime vertical, whether the sun be in the horizon or above it; it would be perhaps more proper to call it the co-azimuth.

Digitized by Google

XI.

And when the ⊙ bears { northerly in north latitude, / southerly in south latitude, }

And the time of observation is A. M., then, if the *latitude* used in finding the apparent time be {greater / less} than the *true* latitude, the longitude will be too far {West. / East.}

But if the time of observation be P. M., then, if the latitude used in finding the apparent time be {greater / less} than the *true* latitude, the longitude will be too far {East. / West.}

Note. After the vernal equinox, when in north latitude, observations may be often taken when the sun bears to the northward of the E. and W. points; and in south latitude, after the autumnal equinox, when he bears to the southward of them; also when the latitude and declination are of the *same* name, and the declination is *greater* than the Latitude in.

The method of using this table will be best shown by

AN EXAMPLE.

If the sun bore S. W. by S., *true*, at the time of observation, in latitude 50° N. by dead reckoning, what will be the error of longitude by chronometer, if the latitude used in finding the apparent time at the ship is erroneous 10 miles?

Ans. 23.3 minutes of longitude.

S. W. by S. is five points from W. In the table opposite five points amplitude is the error for *one* mile, in Nautical miles - - - = 1.497

Multiplied by - - - - 10

gives the error for ten miles = 14.97 in nautical miles. Enter table II, (Bowditch,) with the latitude in, 50°, as a course, at the bottom of the page; and over it, in the latitude column, find 14.97; opposite to it, in the distance column, is 23.3, the error of longitude in minutes of longitude.

In the foregoing example, if the latitude was erroneous 10 miles to the *north* of the *true* latitude; we have 'the ⊙ bearing *southerly* in *north latitude*;' and 'the time of observation P. M.;' and the *latitude* used in finding the apparent time, '*greater*' than the *true* latitude;' and

Digitized by Google

the rule gives the longitude too far *west;* the error by the table was 23′ 3 minutes of longitude; which must be *subtracted* if in *west* longitude, from the longitude by chronometer, but *added* if in *east* longitude. When such observations, however, are projected, these errors are evident by *inspection,* and the *bearing of the land* found.

Digitized by Google

II.

SOME REMARKS UPON THE ADVANTAGES OF THIS METHOD.

There is no difficulty, by the common methods, in determining the position of places on the earth's surface, when these places are situated on the land; for then sufficient time may be taken to select the moment of observation; and every circumstance can be taken advantage of, which will conspire to produce a correct result. But when at sea on board a ship, which is constantly changing her position, and frequently approaching with rapidity a dangerous coast, numerous circumstances often render the case one of considerable difficulty at an important moment.

The common methods of finding the ship's place are these: a meridian observation of the sun for the latitude; an altitude of the sun, bearing as nearly as possible E. or W. for the Longitude by chronometer; lunar observations; double altitudes; dead reckoning; and occasional meridian altitudes of the fixed stars, planets, or moon. Of all these methods, the first two are those which are chiefly relied on, by a great majority of navigators in all cases; and if these observations could be had daily at the *proper* moment, the ship's position would always be easily known, and no danger need ensue.

But the proper moment cannot at all times be chosen to take these observations; for the first must be taken when the sun is *on the meridian*, unless the apparent time is exactly known; and the second when he bears E. or W., except the latitude be previously accurately known; and the observations will be partially or entirely prevented, when thick weather prevails, or be liable to error if the sun does not bear E. or W. at any time during the day.

Digitized by Google

For after the sun crosses the equator, throughout the whole hemisphere from which he is receding in declination, he rises and sets, at points daily further removed from E. or W.; and since an altitude cannot be relied on, which is not greater than 6° or 7° at least, this cause increases the angle from the E. and W. points at which he is observable. So throughout a whole hemisphere, for nearly 7 months in the year, *the sun is not observable* in the proper E. or W. points; and it may be found, that, when the sun is 23° 28′ S, of the equator, he will rise and set in Latitude 50° N., at an angle from E. and W. of 38° 17′; or by compass SE. ½ E. and SW. ½ W, *true;* and when only 7° above the horizon, he will bear SE. ½ S. nearly; and thus the least error of longitude by chronometer, to which a ship is liable for an error of latitude of 30 miles, is 1° 2′; whenever, then, the *latitude by account* is used to find the apparent time at the ship; and the sun does *not bear exactly E.* or *W.*, the longitude, by a good chronometer, will be always *wrong*, unless the latitude by account is strictly accurate. The necessity of some method of finding the ship's place, when the latitude is uncertain, is then apparent.

A meridian altitude shows the ship to be in some point of a small circle of the sphere, called a *parallel of latitude;* (or else on the equator, which is a great circle;) and that the *land*, through which this small circle passes, bears E. or W.

The observation of the chronometer shows in a similar manner, (the latitude being previously correctly obtained,) that the ship is *likewise* situated on *another* circle of the sphere, called a meridian of longitude; and that the *land*, through which *this* circle passes, bears N. or S.

And at the intersection of these *two circles*, (allowing for change of station between the observations,) is the ship's position on the earth's surface.

But since the accuracy of the position depends upon the accuracy of the *latitude* and apparent time, how, when these are uncertain, or even unknown, can the ship's position be fixed upon either of these *two circles*, by either of these two methods, as they are usually directed to be used, when only *one altitude* of the sun can be observed, and that when he bore *neither E. nor W., nor on the meridian?*

Digitized by Google

No practical rules are laid down which include so important a case; the only resource is, to use the latitude by dead reckoning. How very erroneous this may prove, is herein shown.

But *these are the cases* to which the Method of Projection is *peculiarly adapted.* For if it be possible, at *any* time of day when the sun is sufficiently high above the horizon, to observe at all, *one altitude* of the sun; by noting the chronometer time, and observing roughly his bearing, we shall find the ship to be, not on a *parallel of latitude*, it is true, running E. and W.; nor on a *meridian of longitude*, running N. and S.; but on as actual and as simple a circle as either of these, namely, a *parallel of equal altitude;* running diagonally to those circles at an angle which depends on the bearing of the sun; which parallel, when projected on the chart, by the rules, will pass through the position of the ship, and show the bearing of the land, in its course, as it lies projected on the chart, as truly as by a meridian observation, which can be observed but *once* in a day; and if two of these parallels be projected, both the true latitude, and longitude by chronometer, are evident by inspection.

When approaching the land, (and this is the time when it is of the most importance to know the true position of the ship,) it unfortunately happens, that thick weather frequently prevails at considerable distance seaward, so that the sun is visible only for a few moments during a run of several days, and it is certainly important that a single observation at such times should be rendered available.

There is no part of the seas, that is liable in a greater degree to fogs and thick weather, than the English channels, north seas, &c.; and there is no part more crowded by the fleets of all nations; the coast, too, is dangerous; and the westerly gales are severe, and of long duration; and ships are often placed in situations there, from uncertainty of their position, which render it dangerous 'to run,' and often more dangerous to 'lay by,' or to 'stand off and on.'

Having sailed from Charleston, S. C., 25th November, 1837, bound to Greenock, a series of heavy gales from the westward promised a quick passage; after passing the

Digitized by Google

Azores, the wind prevailed from the southward, with thick weather; after passing longitude 21° W., no observation was had until near the land; but soundings were had not far, as was supposed, from the edge of the bank. The weather was now more boisterous, and very thick; and the wind still Southerly; arriving about midnight, 17th December, within 40 miles, by dead reckoning, of Tusker light; the wind hauled S. E., true, making the Irish coast a lee shore; the ship was then kept close to the wind, and several tacks made to preserve her position as nearly as possible until daylight; when nothing being in sight, she was kept on E. N. E. under short sail, with heavy gales; at about 10 A. M. an altitude of the sun was observed, and the chronometer time noted; but, having run so far without any observation, it was plain the latitude by dead reckoning was liable to error, and could not be entirely relied on.

Using, however, this latitude, in finding the longitude by chronometer, it was found to put the ship 15′ of longitude, E. from her position by dead reckoning; which in latitude 52° N. is 9 nautical miles; this seemed to agree tolerably well with the dead reckoning; but feeling doubtful of the latitude, the observation was tried with a latitude 10′ further N.; finding this placed the ship E. N. E. 27 *nautical* miles, of the former position, it was tried again with a latitude 20′ N. of the dead reckoning; this also placed the ship still further E. N. E., and still 27 *nautical miles.* These three positions were then seen to lie in the direction of *Small's light.* It then at once appeared, that the observed altitude must have happened at *all the three* points, and at *Small's light*, and at the ship, at the *same instant of time;* and it followed, that Small's light must bear E. N. E., if the chronometer was right. Having been convinced of this truth, the ship was kept on her course, E. N. E., the wind being still S. E., and in less than an hour, Small's light was made, bearing E. N. E. ½ E., and close aboard.

The latitude by dead reckoning, was erroneous 8 miles; and if the longitude by chronometer had been found by this latitude, the ship's position would have been erroneous 31½ *minutes of longitude,* too far *W.*, and 8 *miles* too far *S.* The ship had, from current, tide, or error of log, overrun her reckoning, 1 mile in 20. (See plate III.)

Digitized by Google

Thus it is seen, that an observation taken at *any* hour of the day, and at any angle between the meridian and E. or W. points, is rendered *practically* useful, inasmuch as the chronometer can be depended on.

A great proportion of the chronometers now in use, are sufficiently accurate to determine the ship's position; and particularly when they have been out of port only a month or two; the government of Great Britain have spent thousands to perfect them; but it should be recollected that the Greenwich time is only *one* of the quantities which must be correct, to find the longitude; we must be *sure* that the *time at the ship* is correct also; and it can scarcely be doubted, that *errors of latitude* have caused the loss of as many ships, as errors of chronometers; while chronometers have borne the blame, not only of their own occasional imperfections, but also of these *errors of latitude*, to which the navigator is subjected, from the prevalence of thick weather, gales of wind, and when a ship is under short sail, wearing, and tacking, and in tide-ways near the land; making leeway, and changing the rate of sailing with different cargoes on board.

The proverb, that 'a seaman always knows his latitude,' had its origin in those days, when *the longitude* was the great point to be determined; for before lunar observations were used, or chronometers invented, the only observations which could be relied on, were those for finding the latitude; and thus the latitude was *comparatively* certain; but the longitude was estimated by the log, and great errors were common.

But at present the case is almost completely reversed; for with a good chronometer, used with care, it is *the latitude* which is the great desideratum; if the latitude is *accurately* known, a single altitude is sufficient to find the ship's place; and if it be *uncertain*, the Method of Projection affords the *most complete substitute* for a meridian observation, the altitude being observed at *any* hour.

By this method, if the chronometer is *wrong*, and the Latitude *uncertain*, the *bearing of the land* would be erroneous, by a quantity equal to the whole error of chronometer, when the sun is observed bearing *E.* or *W.;* but as the angle *increases*, from the E. and W. points at which an observation is taken, the error in the bearing of the

Digitized by Google

land, caused by the error of the chronometer, constantly *diminishes;* and when the sun is on the meridian, *vanishes*, when the observation becomes a real *meridian altitude*, whence the true latitude may be found as usual. But by the usual method no approximation to correctness can be made.

The case when a second altitude is observed, is deduced from the manner in which the first is projected; and in an analogous manner, as a meridian observation, and one taken when the sun bears east or west, by the usual method, place the ship at the intersection of a circle of longitude with a parallel of latitude, allowing for change of station, so the intersection of the first projected parallel of equal altitude with the second, is the ship's place.

The extra work to project the second parallel is trifling, for it will be noticed that many of the logarithms are the same as in the first.

The advantages of the Method by Projection may be summed up as follows:

1. When the latitude, &c., are uncertain, one altitude of the sun, at *any* hour, with the chronometer time, is available in a similar manner as a meridian observation, which can be taken only *once* in a day.

2. The errors of longitude by chronometer, consequent to any error in the latitude, are shown by inspection.

3. The sun's azimuth is found at the same operation.

4. In addition to these results, found by one altitude, two similar altitudes give the true latitude, and also the longitude by chronometer. By the common methods of double altitudes, the longitude must be found by a subsequent calculation; which circumstance renders this method much the *shortest.*

5. The usual simple calculation for finding the apparent time at the ship, is known and daily practiced by every shipmaster who uses a chronometer. No other formula is used.

6. Double altitudes of the sun are therefore within the reach of all persons who use chronometers, and who are unacquainted with the various formulas laid down in the books.

Digitized by Google

III.

EXPLANATION OF THE PRINCIPLES UPON WHICH THIS METHOD DEPENDS.

To facilitate the understanding of the theory of this method, a reference to the following common definitions relative to spherical bodies may be necessary.

A *sphere* is a uniformly round body, every point on the surface of which is equally distant from a certain point within the body, called the centre.

If any plane or flat surface pass through the sphere, the intersection of the surface of the sphere by the plane is the circumference of *a circle.*

A *great* circle of a sphere is one whose plane passes through the centre of the sphere, and so divides the sphere into two *equal* parts, called hemispheres.

A *small* circle of a sphere is one whose plane does not pass through the centre of the sphere, and consequently divides the sphere into two *unequal* parts.

The *pole* of *any* circle of a sphere is a *point* on the surface of the sphere from which every point in the circumference of the circle is equally distant; thus every circle of the sphere has two poles, and the straight line joining them is the diameter of the sphere.

One half* of the spherical surface of the earth being illuminated by the sun at a given instant, while at the same time the opposite portion is in the shade, that line, which is the boundary between the illuminated and dark hemispheres, is called by geographers 'THE CIRCLE OF ILLUMINATION.'

* The corrections being made by the usual tables, for Parallax, Semidiameter, Refraction, and the Spheroidal Figure of the Earth — and if the eye be elevated, for Dip also.

Digitized by Google

It is a *great circle*, and its plane passes through the centre of the earth, dividing it into two equal parts; in the same manner as the equator is a great circle of the earth, and divides it into the northern and southern hemispheres.

But these are also divided by *small circles* of the sphere, parallel to the equator, which are called 'parallels of latitude;' and by their means the latitude is reckoned, all places situated on the equator having their latitude equal to 0°; and proceeding towards the poles, the latitude of places on these small circles increases regularly, until, arriving at them, it becomes equal to 90°.

In like manner, all those places which are situated on the *circle of illumination*, since they have the sun's centre in the horizon, have his *altitude* equal to 0°, and that point on the surface of the earth, next towards the sun, and which is *the pole* of the circle of illumination, has the sun in the zenith; consequently, at that point his altitude is equal to 90°. The *intermediate* altitudes of the sun may likewise be reckoned on *small circles*, parallel to the circle of illumination; and which may be called PARALLELS OF EQUAL ALTITUDE; since they serve the purpose of showing all those places on the earth's surface, which have an *equal* altitude of the sun, at *the same instant* of time; the pole, at which the sun is in the zenith, may be called the POLE OF ILLUMINATION, and the whole system of circles, THE SYSTEM OF CIRCLES OF ILLUMINATION.

Thus it appears, that, as all those places on a given *small circle* of the earth, called a parallel of latitude, have the *same latitude*, and that degree and minute which is the name of that parallel; so, all those places, on a given *small circle*, called a parallel of equal altitude, have the SAME ALTITUDE of the sun, and the same degree and minute which is the name of this parallel.

Since the poles of the equator, and of the parallels of latitude, coincide with the extremities of the earth's *axis*, the system of parallels of latitude is not affected by the daily rotation of the earth; but always remains constant; indeed, it has been constructed with particular reference to this object.

Such, however, is not the case with the system of circles of illumination; because, the *poles* of this system do *not*

Digitized by Google

coincide with the extremities of the earth's *axis;* for the sun being always vertical to one of its poles, this follows the sun, (at the rate of 15° per hour,) in his apparent daily course from east to west, and also in the ecliptic, through all the degrees of the sun's declination.

But if, at any instant, we can project upon the earth's surface the position of this moving system, or any parallel of equal altitude belonging to it, which may correspond to an observed altitude of the sun, we shall have as sure a method of determining the position of places on the earth's surface, as by means of the system of parallels of latitude.

But it may be well to consider in what manner the system of circles of illumination intersects the different parallels of latitude, and the meridians of longitude.

Because the sun is always vertical to the pole of illumination, and the parallels of latitude on the earth's surface are concentric with the parallels of declination on the celestial sphere, the *latitude of this pole is always equal to the sun's declination.*

If, then, about a point (as Z, plate I,) in any longitude, but in that parallel of latitude which is equal to the sun's declination as a centre, we describe small circles of a sphere at every 10° distant, after the manner of the parallels of latitude, and this may be seen to advantage on a terrestrial globe, we shall observe, that the parallels of equal altitude, which we are describing, cut the parallels of latitude and the meridians of longitude at all possible angles; in the N. W., N. E., S. W., and S. E. directions from the pole of illumination, Z, they will cut them diagonally; in the north, south, east, and west points from this pole, they will touch them as tangents; and at intermediate bearings will make intermediate angles with them.

Each parallel of equal altitude, it will be observed, is described round the pole of illumination, as a centre, at a distance, measured on the arc of a *great* circle passing through this pole, which is equal to the *complement* of the *sun's altitude* corresponding to each parallel respectively.

Hence, with a given altitude of the sun, the corresponding parallel of equal altitude cuts only certain parallels of latitude, not north of a particular latitude in the northern,

Digitized by Google

nor south of a particular latitude in the southern hemisphere. The distance, then, of the north and south points, in any parallel of equal altitude from the pole of illumination, is equal in degrees and minutes to the complement of the sun's altitude; but these points being on the same meridian as the pole of illumination, this distance is also equal to the *difference of latitude* between the pole and either point; and because they are on the same meridian as this pole, the apparent time at these points will be *noon*, for it is always noon at the meridian of the point which has the sun in the zenith.

Now the difference of longitude, between any two places on the earth's surface, is expressed by the difference of the apparent times at those places, turned into degrees, 15° to the hour.

The difference of longitude of *any point* in a parallel of equal altitude, corresponding to any observed altitude of the sun, from the meridian of its pole of illumination, will then be expressed by the difference of the apparent times at those places; that is, by the difference between $0^h\ 0^m\ 0^s$, and the *apparent time from noon* at the point, in the parallel of equal altitude, which may be given. And the difference of longitude between *any two points given* will be expressed in a similar manner.

But if the altitude, and declination of the sun be given, the apparent time will vary only with the different *latitudes* which may be used in the calculation.

If, then, we *assume* any latitude, not north of the north point, nor south of the south point of the parallel of equal altitude corresponding to an observed altitude of the sun, the declination being known also; and thence find the apparent time for noon, (by method 3, Bowditch,) the *difference* between such time, and $0°, 0^m, 0^s$, turned into longitude, (15° per hour,) will be the *difference of longitude* of the point in the parallel, from the meridian of the pole of illumination, and *its latitude is had by the assumption:* thus the position of such point is found *relatively* to the pole of illumination, which is situated in a certain given latitude.

In the same way, by assuming *two* latitudes, with the same restrictions, the difference of their apparent times will express the difference of longitude of the two points

Digitized by Google

having the *two* assumed latitudes; and their positions *relatively to the pole* will be expressed by their times from noon, turned into difference of longitude.

Each point, thus found, has another point corresponding to it in its parallel of equal altitude, in the same assumed latitude; namely, one on each side of the meridian of the pole, and at equal differences of longitude from it; and they correspond to A. M. and P. M. times of observation; and to distinguish on which side of the meridian of the pole of illumination the point lies with which we have to do, we should notice in practice the bearing of the sun. The required point being westward from the pole, if an observation be A. M.; and eastward, if P. M.

By assuming as many latitudes as we please, we may thus project as many points as are necessary; and by joining all the points determined by a curve line, the whole parallel of equal altitude corresponding to any observed altitude of the sun, will be projected, in latitude, *relatively* to the pole of illumination.

From the foregoing considerations the rule for solving the following problem is deduced.

PROBLEM I.

The correct altitude of the sun's centre being observed, and his declination being given, it is required to project, on Mercator's chart, the corresponding parallel of equal altitude relatively to its pole of illumination, showing what parallels of latitude it cuts, and in what manner it cuts both them and the meridians of longitude.

Note.—Owing to the distorted shape of the earth's surface by Mercator's chart, the curves will not appear as circles, as they would be if projected on the earth, or on a terrestrial globe.

RULE.

1st. Find the complement of the sun's altitude; which gives the difference of latitude between the pole of illumination and the north and south points of the parallel of equal altitude.

Digitized by Google

2d. Project then on the chart (Plate I,) in a latitude equal to the sun's declination, the pole of illumination, the point Z, in any assumed longitude, as 0°; and on the meridian of Z, in their respective latitudes just found, project the north and south points N. and S.; at which the apparent time is noon, or $0^h\ 0^m\ 0^s$.

3d. *Assume* a latitude, as that of any point, A., B., or C, &c., not north of N., nor south of S.; and with the given altitude and declination, find the apparent time from noon (Method 3, B.) which, turned into longitude, 15° per hour, will be the difference of longitude between Z, and A, B, or C, &c., and its latitude is had by assumption.

4th. In the latitude assumed, (if that of A,) on each side of the meridian of Z, project the points A, A′, with the difference of longitude found above; then A and A′ will be *two points* in the parallel required; in the same manner find as many points as are necessary.

5th. By joining all the adjacent points with a curve line, the whole parallel, and the latitudes it cuts, &c., are evident by inspection.

Note. — In this problem the difference of longitude of the points have been reckoned from the meridian of Z; but the curve could be also projected, by taking the meridian of any point, as A, for a starting-point, and thence might be reckoned the points B, C, &c., and finally the meridian of Z, and then Z be projected.

Example I.

The sun's central altitude is 60°; the declination 10° N., it is required to project the parallel of equal altitude, &c.

1st. To find the complement of the sun's altitude, and the latitude of the N. and S. points.

from 90°
sub. 60
remains 30° = complement of the sun's altitude.

To 30 comp. ⊙ alt.
add 10° dec.
sum 40° = lat. of N.
diff. 20° = lat. of S.

2d. Project (plate I) the points Z, N, and S, in their

Digitized by Google

proper latitudes, and in any one assumed longitude, as 0°.

3d. To find and project any point; as one in latitude 30° N., which call A.

Lat.	30 00 N.	- - - -		sec.	0.06247
Dec.	10 00 N.	- - -		sec.	0.00665
Diff.	20 00	nat. cos.	93969		
⊙ Alt.	60 00	nat. sin.	86603		
H. M. S.		diff.	7366	log.	3.86723
1 35 57.05	=	log rising	=		3.93635

1 35 57.05 = 23° 59′ 15″.75, or the difference of longitude of A in latitude 30 N., from the meridian of Z, where it is noon.

4th. On each side of the meridian NZS with this difference of longitude project two points, A and A′, in latitude 30° north; which will be two points in the curve required; the altitude is observed at A, when the time is P. M., and at A′, when A. M.

Find other points B, B′, C, C′, &c.

5th. Join all the points, and the requisitions of the problem are evident by inspection.

In the same manner are projected the parallels of equal altitude, corresponding to sun's altitude, 0°, 10°, 20°, 30°, &c., when the sun's declination is 10° N.

After any lapse of time, the sun, and, consequently, the pole of illumination, to which the sun is always vertical, and likewise all the parallels of equal altitude, will have passed, at the rate of 15° per hour, due west, (no change of declination having taken place,) and will have arrived after such time at some point, as Z′, (plate I,) whose difference of longitude from Z will be equal to the elapsed time turned into longitude, 15° for an hour; because the angular space passed over is equal to the product of the time by the angular velocity.

But if, at the expiration of such time, a second altitude be *observed*, and its corresponding parallel of equal altitude be projected as before, it will have for its pole Z′; and it must intersect the first projected parallel in two points, one to the northward and one to the southward of the

Digitized by Google

poles Z and Z′; and one of these two intersected points must be the position of the observer; because both altitudes are observed at one station; and if a point is situated at the same time in two circles, it can only be at one of the *two* intersected points; which one of the intersections is the observer's place, obviously depends on the bearing of the sun at the times of observation; and the two curves being projected on the chart, the intersection will be situated in a *latitude* which is evident by inspection.

The difference of latitude between the two poles of illumination, Z and Z′, is equal to the difference in the sun's declination, which may have taken place during the elapsed time. This change of declination must not be neglected, but each pole projected in that latitude which is equal to the sun's declination at each observation respectively.

Two altitudes of the sun may be observed, either both A. M., or both P. M.; or one A. M., and the other P. M.; for as the system of circles of illumination passes westward, the *western* arcs of the parallels of equal altitude, which are *interior* to the *first* projected parallel, cut its *western* arc in two points, and poles being to the *eastward* of the intersections, the time at which the altitudes are observed at either intersected point, will be A. M.

So also, the *eastern* arcs of the *exterior* parallels, cut the *eastern* arc of the *first* projected parallel, in two points; but the poles now being to the *westward* of the intersections, the time will be P. M.

And after a greater time has elapsed, *eastern* arcs of both *exterior* and *interior* parallels will cut the *western* arc of the first projected parallel, and the intersected points lie *between* the longitudes of the two poles, and show that the time at which the first altitude was observed, is A. M., since its pole is *eastward;* and the time of the other is P. M., since its pole is *westward* of the two intersected points.

We shall now be able, using the rules of Problem I, to project the parallels of equal altitude, corresponding to *two* observed altitudes of the sun; the elapsed time

Digitized by Google

giving the distance between their respective poles of illumination; and intersection which takes place, and which is designated by the bearing of the sun, giving the *true latitude* of the place of observation.

From these considerations are deduced this problem and rule.

PROBLEM II.

Having noted the elapsed time between two observed altitudes of the sun's centre, the declination at each time, and the sun's bearing being given, required to project on Mercator's chart the two corresponding parallels, showing how they cut the parallels of latitude and meridians of longitude, within their respective limits of latitude, how they intersect each other, and the *true latitude* of the places of observation.

RULE.

1st. By problem I, project the parallel corresponding to the first altitude.

2d. Turn the elapsed time into difference of longitude, 15° for an hour.

3d. With which difference of longitude, project, *westward* always from Z, the point Z′, in a latitude equal to the sun's declination at the time of the second observation; and Z′ will be the pole of illumination of the parallel corresponding to the second observed altitude.

4th. Proceed, as in problem I, to project the parallel corresponding to the second altitude relatively to Z′.

5th. Upon inspection, the curves will be seen to intersect, as at A and *a*. (plate I.)

6th. The true latitude is at one of the intersected points; which point it is depends on the bearing of the sun.

The other requisitions are evident by inspection.

EXAMPLE II.

The two altitudes are 60° and 40°; the declination 10° N.; supposed invariable between the observations; the

Digitized by Google

elapsed time is $1^h\ 41^m\ 18^s\ 89$; the sun bearing between S. and W., it is required to project, &c.

1st. The first altitude is the same as in example I, and is already projected.

2d. The elapsed time, $1^h\ 41^m\ 18^s\ 89$, is equal to 25° 19′ 43″.4, (15° for an hour.)

3d. In latitude 10° N. project Z′, 25° 19′ 43″.4 west from Z. (plate I.)

4th. Project N′ and S′ as in problem I; and to find any point, as one in lat. 30° N., which call X, proceed as under.

Lat. 30°	N.	- - -	sec. 0.06247
Dec. 10	N.	- - -	sec. 0.00665
Diff. 20		nat. cos. 93969	
⊙Alt. 40		nat. sin. 64279	
		diff. - 29690	log. 4.47261

H. M. S.

3 17 15.94 = log rising, = 4.54173

3 17 15.94 = 49° 18′ 59″.1, or difference longitude of X in latitude 30° N. from the meridian N′Z′S′, where it was noon at time of 2d observation.

On each side of N′ Z′ S′ with this difference of longitude, project two points, X and X′, in latitude 30 N.; which are two points in the curve required.

Find the other points Y, Y′, &c., in the same way. Join all the points, and the whole curve will be projected.

5th. It is now evident, how the curves intersect each other, as at A and *a*.

6th. The sun having been west of the place of observation for both altitudes, shows that both were taken P. M.; and having borne southerly also, the northern intersection, A, is at the *true latitude* of the place; and it will be found to be on the chart in 30° N.

Thus far we have determined the positions of the projected parallels, *relatively* to their poles, and the distance of these from each other; and the whole only in relation to the latitude of the place of observation; consequently, it is only the bearing of the land in that latitude which has become known.

Digitized by Google

To determine their actual position, in longitude, also, on the earth's surface, and project them at any instant, we must have means to arrest, in their passage, both systems of circles of illumination, while moving from east to west.

If the longitude of the place of observation be known, or if the time be noted by chronometer which shows true mean time at a known meridian; and the altitudes calculated by assumed latitudes as before to find the apparent time, the difference between the apparent times and the chronometer time will give the longitude of each point, and the actual position of each curve is fixed in both latitude and longitude.

By such means, having a single altitude of the sun and chronometer time, we may find a ship at sea to be on some point of a *small circle*, which has for its pole, the pole of illumination, in like manner, as a meridian altitude of the sun fixes the position of the ship in some point of a *small circle*, called a parallel of latitude, and which has for its pole, the pole of the equator.

Hence, the bearing of any land, through which the curve passes, is seen by inspection, as we may observe the bearing of the land, through which the parallel of latitude passes.

Hence, we can solve the following problem.

PROBLEM III.

The true altitude of the sun being observed at any place, his declination and bearing, and the true mean time at Greenwich, by chronometer, being given; it is required to project the corresponding parallel of equal altitude, showing *what* meridians of longitude it cuts, east or west of Greenwich, and what parallels of latitude; and in what directions; consequently, what land it passes through, and how such land bears from any point in the curve.

RULE.

Proceed, as in problem I, to project the curve; only taking notice, that when '*the apparent time*' is found for

Digitized by Google

any point, the difference between it and the chronometer time, (corrected for equation of time and rate,) gives the longitude of such point, *east or west of Greenwich* — (while its difference of longitude, from the meridian of *its pole* of illumination will still be expressed by the '*apparent time from noon*,' as in problem I.) Thus, are all the points projected in *latitude* and *longitude*, and the requisitions of the problem are obvious on inspection.

Example III.

Sun's altitude 60°; declination 10° N.; corrected time at Greenwich, by chronometer, $0^h\ 0^m\ 0^s$, sun bearing southwesterly. It is required to project the curve passing through the position of the observer, showing how the land bears from any point in the curve.

1st. This example is the same as example I, except the chronometer time. It will be necessary, then, only to see how this time affects the position of the curve; (by example I, the curve was projected in *any* assumed longitude.)

	H. M. S.	
We have Greenwich time corrected, for rate and equation, - - - -	0 0 0	M.
The apparent time, example I, in assumed latitude 30°, at a point A, (plate I,) sun bearing southwesterly, was - - - - -	1 35 57·05	P. M.
Difference, - - - -	1 35 57	

The apparent time is greater than the Greenwich time, showing that the point A, in latitude 30° N., is $1^h\ 35^m\ 57^s$, or 23° 59′ 15″.75 east of Greenwich. Project A, then, in such longitude and latitude, and its *actual* position is determined.

In the same manner are all the other points projected, and the curve drawn.

The other requisitions of the example will appear if we refer all the points A A′, B B′, &c., to a chart, on which the land is designated; thus A is situated on the north coast of Africa, in the same meridian as a part of Greece; B, near the south of Sicily; and the curve passes likewise near the south of Sardinia; over Majorca, through

Digitized by Google

Spain, near Madrid; through Portugal, near Lisbon, not far from Madeira; thence to within 6°. west of Cape Verde Islands; thence 10° east of Cape St. Roque, S. A.; thence 3½° south of St. Helena; and thence reaches the continent of Africa again, in latitude 18° S., near Cape Negro; thence over the interior of Africa, towards Egypt to the point A again; all these places having the same altitude of the sun at the same instant; the place of the observer, being of course in the curve, having OBSERVED the *same* altitude at the *same* time.

Thus, the land through which the curve passes, is evident by inspection; and also its bearing from any point in the curve; and thus, by projecting the curve for any observed altitude, we have as sure a method of determining the position of places, as by means of parallels of latitude and a meridian observation.

From the foregoing three problems, the following one is directly deduced.

PROBLEM IV.

Having two altitudes of the sun, the declinations at both observations, and his bearings, and the Greenwich times by chronometer; to project the corresponding parallels of equal altitude, showing *what* meridians of longitude and parallels of latitude it cuts, and in what manner; what land they pass through; how it bears from any point in either curve; and the true latitude and longitude of the place of observation.

RULE.

1st. Project both parallels as in example II, applying the Greenwich time, as in example III.

2d. The requisitions of the problem will be evident by inspection.

NOTE.

The '*elapsed time*' does not appear, as such, in this problem; for it enters into the longitudes of the points of the second parallel, *placing them* always so much *further west*, as *greater* time elapses between the observations.

Digitized by Google

Example IV.

Sun's central altitude was 60°, when chronometer time corrected for equation was $0^h\ 0^m\ 0^s$; and 40°, when chronometer time corrected was $1^h\ 41^m\ 18^s.89$; declination 10° N., invariable between the observations; sun's bearings southwesterly, required to project, &c.

This example is the same as example II, except chronometer time; project the curves as directed, (plate I,) applying the chronometer time, as in example III.

This being done, the requisitions are manifest; the latitude sought, being 30° N., and the longitude 23° 59′ 15″.75 east; since if, from the apparent time at A, or X, (which two points coincide, at the time of the second observation,) namely:

	H.	M.	S.	
App. time,	3	17	15.94	P. M. (sun bearing southwesterly,)we
subtract,	1	41	18.89	P. M. the corrected chro. time,
the diff. is	1	35	57.05	= 23° 59′ 15″.75 east longitude,

since the chronometer time is least.

The problem of double altitudes admits, on these principles, another simple solution, as follows.

PROBLEM V.

Two correct central altitudes of the sun, his declinations, and bearings, at each observation, and the elapsed time being given; required to project, on a terrestrial globe, the latitude of the place of observation.

RULE.

1st. Turn the elapsed time into degrees, 15° to an hour.

2d. In the latitude equal to the sun's declination, at each observation, project the two poles of illumination in two points, distant a difference of longitude found above.

3d. On the eastern pole, (or that corresponding to the *first* altitude,) as a centre, and with a distance measured on a great circle, equal in degrees and minutes to the

Digitized by Google

complement of the *first* altitude, describe, with a pair of dividers, an arc in that direction from the pole indicated by the bearing of the sun, at first observation.

4th. On the western pole, as a centre, with a distance equal to complement of the second altitude, describe an arc cutting the former arc.

5th. The intersection will be in the latitude of the place of observation, if both altitudes be observed *at one station.*

I.

In the foregoing problems, it has been supposed, that both altitudes were taken at one station; but it is necessary to show how to allow for any change of station between the observations.

The curve Z M, Plate I, is an arc of a great circle, passing through Z, the *pole of illumination*, where the sun's altitude is 90°; and through M, a point in the *circle of illumination*, where the sun's altitude is 0°; it is of course perpendicular to all the parallels of equal altitude.

It is plain, then, that for *every mile* a ship sails on the great circle M Z towards Z, that is, at right angles to the parallels, she *increases* the sun's altitude *one minute;* and every mile sailed from Z, *decreases* his altitude *one* minute.

And if she sails at right angles to M Z, that is, *on* a parallel of equal altitude, she would *neither increase nor diminish* it.

So, in sailing at a greater or less angle than 8 points from a parallel of equal altitude, she would increase or diminish the *altitude* in a proportional manner; and in so sailing would make a 'difference' of *altitude*, in a similar manner as, in sailing from a parallel of *latitude*, she would make a 'difference' of *latitude*, according to the course and distance sailed.

In sailing from the point, then, which was the ship's place in the parallel of equal altitude corresponding to the first altitude, she will arrive at a point in another parallel which belongs to the same *system of circles of illumination*, with the first projected parallel, on a certain course and distance; and this new parallel will corres-

Digitized by Google

pond to an altitude which would have been observed at the instant of the first observation, had the ship been at this new point at the same time; but this new point *is that* at which the *second* altitude is taken, after the time elapsed, as noted by the watch.

The 'difference' of *altitude* made good, then, proportional to the course and distance sailed from the first projected parallel, will be the correction of the first altitude for change of station, additive or subtractive, as explained before. This 'difference' of *altitude* will be measured on the arc of a great circle, passing through Z, (perpendicular to the parallels of equal altitude,) and this new point to which the ship may have sailed; and the arc, which is intercepted between this point and the first projected parallel, will be the correction in miles. We have, then, the following rule.

Set off, from the first projected parallel, the distance sailed in the direction of the course made good between the observations. Through this point project a curve line parallel to the first projected parallel, and the intersection of this curve line with the *second* projected parallel, will be the true latitude corrected for change of station.

II.

Since M Z, is an arc of a great circle passing through Z and M, perpendicular to all the parallels; and the sun's centre, and Z and M, are all in one plane, and the sun is perpendicular to Z, therefore the arc Z M, lies wholly in this plane, and the direction of the sun, from any point in Z M, is projected in the direction M Z, on the chart; but the angle at any point on the earth's surface, which the bearing of the sun projected, makes with the meridian projected at that point, is the sun's true azimuth. Thus, at M, the sun bears in the direction M n, or about E b N½ N.; and the angle which M n makes with the meridian passing through M, is the sun's true azimuth at M; now M n is perpendicular to the circle of illumination, and n o is perpendicular to the parallel of equal altitude for 10°, and so of the other portions of M Z; so, in order to project the sun's azimuth, at the time of observation of his altitude, at any point in the corresponding parallel of equal altitude, we have this rule:

Digitized by Google

Draw a tangent, at the given point, and erect a perpendicular to the tangent at the point given; the perpendicular will be in the direction of the sun at that point, and the angle it makes with the meridian, passing through this point, is the sun's true azimuth.

III.

From the manner in which the parallels of equal altitude cut the meridians of longitude and parallels of latitude, may be seen how, with a given altitude of the sun and the chronometer time, different latitudes, used in finding the apparent time, give different longitudes by chronometer.

For if the sun be observed A. M., in north latitude, when he bears southerly, then latitudes at *greater* distances from Z, (plate I,) give *smaller* differences of apparent time from noon, and, therefore, a *less* difference of longitude, if in *west* longitude, and a *greater* difference of longitude, if in *east* longitude, and analogous differences under other circumstances.

It may be seen, too, that when the sun bears *east or west*, a considerable difference in the latitudes used in finding the apparent time at the ship, will occasion but a trifling error in the longitude by chronometer.

Hence, it is *not only* because the sun is '*rising or falling faster*,' when bearing east or west, that this is the best time to take chronometer sights for the longitude; but because, also, at such times, an *erroneous latitude* will not much affect the result.

So, also, when the sun bears north or south, it is easy to find the *latitude* by *meridian observation;* but the longitude by chronometer is subject to great errors, owing to the difficulty of finding the apparent time at the ship, and not only because the sun is 'rising or falling' *slower*, but also because a slight error of latitude gives a very great error of longitude by chronometer.

The errors of longitude by chronometer, then, consequent to an erroneous latitude used in finding the apparent time at the ship, *increase* regularly, from the time the sun bears *east*, until he reaches the meridian, when the error is a *maximum;* and thence diminish until he bears *west*, when they *vanish*.

Digitized by Google

By reference to plate I, and from these remarks, it will be found, that the *error of longitude* any *error of latitude* produces, at the instant of observing an altitude of the sun, is equal to *the difference of longitude between any two points in the projected parallel, whose difference of latitude is the error of latitude.*

Thus, in the winter season, when the sun *does not rise or set either east or west*, and is not observable, frequently, until he bears S. E., or more southerly, it is of the utmost importance to estimate such errors.

IV.

In practice it is not necessary to project the whole curves, but only such *arcs* as will include the intersected points required. Two points in each arc are sufficient, that part of the curve which is required being indicated by the bearing of the sun.

It will be found convenient, in finding the apparent times, for these two points, to assume two latitudes to be used in the calculation, one on each side of the latitude by dead reckoning; one being the next degree less and the other the next degree greater than such latitude, and without any odd minutes; the position of the four points, and their arcs being projected, will, in general, be found to *include* the intersected point, or be very near to it; for if we join the points by *straight* lines, they will either intersect each other, or converge towards a point beyond the limits of the assumed latitudes; in this case we have only to produce the lines *to an intersection.*

These two *straight* lines, although they do not lie strictly in the curves, but may be regarded as chords of their respective arcs, will not sensibly differ from the arcs themselves, or even from their tangents, at points near the intersection; particularly as the parallels most frequently used, have a large radius.

Should, however, the altitudes be *great*, in which case the curves have a smaller radius, we can choose such latitudes as shall be nearer the intersected points, and thus reduce the error, on this account, as much as we please. Also, if the altitude be observed when near *noon*, the *assumed* latitudes should not be chosen too great, or other-

Digitized by Google

wise, as mentioned in the note to rule 1, practical part; and they should be such as are much *nearer* to the supposed latitude.

Hence, the following practical problem is deduced, when the times are noted by a common watch.

PROBLEM VI.

Two correct central altitudes of the sun being given, and also the elapsed time, the declinations and bearings of the sun at both observations, the course and distance made good *between* the observations, and the latitude by dead reckoning; it is required to project on a '*particular*' Mercator's chart, those ARCS of the corresponding parallels of equal altitude, which are mutually intersected; showing, 1st. The true latitude. 2d. The correction for change of station. 3d. The sun's true azimuth at each observation. 4th. The errors of longitude consequent to any error of latitude, when the times are noted by the chronometer.

RULE.

1st. Turn the elapsed time into degrees, (15° to an hour,) which will be the difference of longitude between the two poles of illumination, Z and Z′; the *eastern* pole, or that which corresponds to the *first* altitude, being called Z, and the *western* pole, which corresponds to the *second* altitude, Z′.

2d. Assume *two* latitudes, one of which is the next degree *less*, (without any odd minutes,) and the other the next degree *greater* than the latitude by account.

3d. With the first altitude and declination find (method 3, B) the apparent time *from noon* with *each* of the two assumed latitudes; turn these resulting times into differences of longitude, 15° to an hour; and, if the altitude was observed A. M., they will show the differences of longitude of *two points* in the required arc, WEST of the meridian of Z; but if the altitude was P. M., EAST of the meridian of Z; these two points having the *assumed* latitudes respectively; name that point which has the *least* assumed latitude, A, and the other, A′.

Digitized by Google

Do the same with the second altitude; and name that point which has the *least* assumed latitude B; and the other B′. The differences of longitude of B and B′, will be reckoned from Z′, and not from Z.

4th. Project on the chart, plate II, the four points A, A′; B, B′, in their respective latitudes; and distant their respective differences of longitude, from the meridians of their respective poles Z and Z′; (which poles are distant from each other a difference of longitude equal to the elapsed time turned into degrees;) and the points must be projected on that side of these meridians, designated by A. M. and P. M. times of observation.

Explanatory Note.

Project A in its respective latitude, and in *any* assumed longitude; if A. M., mark it 'A, west of Z;' (*so many degrees* as have been found from the corresponding apparent time from noon;) but if P. M., mark it 'A, east of Z,' (*so many degrees.*)

Project A′ in its respective latitude, but with a difference of longitude from A, (east or west,) equal to the difference between the longitudes of A from Z, *and* A′ from Z; and mark it 'A′ (east if P. M., or west if A. M.,) of Z,' (so many degrees and minutes, as the case may be.)

Now to project B, B′, with reference to A, A′, we must first find the difference of longitude of A from Z′; because their differences of longitude are not reckoned from Z, but from Z′; this is done by means of the elapsed time, or the difference of longitude between Z and Z′, thus:

I. If both observations be A. M., then difference of longitude of A, west of Z′ = difference of longitude of A, west of Z — difference of longitude of Z′, west of Z.

II. If both observations be P. M., then difference of longitude of A, east of Z′ = difference of longitude of A, east of Z + difference of longitude of Z, east of Z′.

III. If one observation be A. M., the other P. M., then difference of longitude of A, east of Z′ = difference of longitude Z′, west of Z — difference of longitude of A, west of Z.

Digitized by Google

Project B in its respective latitude, with a difference of longitude from A, (east or west,) equal to the difference between the longitude of *A from Z'*, (found by one of these three rules,) and B from Z', (found by method 3 B,) mark it 'B (east or west) of Z', (so many degrees.')

Project B' in its respective latitude, with a difference of longitude from A, (east or west,) equal to the difference between the longitudes of A from Z' and B' from Z'; and mark it 'B' (east or west) of Z' (so many degrees.')

5th. Join by *straight* lines A and A', B and B'; and if they do not intersect each other, produce them to an intersection; and if the ship has not changed her station between the observation, this intersection will be in the *true latitude.* But, if the station has been changed, then in the direction of the course made good, set off the distance from *any* point in the straight line A A'; through *this* point draw a *straight* line parallel to A A', and its intersection with B B' is the *true latitude;* corrected for change of station.

6th. From this point let fall a perpendicular upon A A', and the length of this is the correction in miles to the first altitude; additive, if the course sailed was towards Z, subtractive, if from it.

7th. Produce this perpendicular towards the pole of illumination Z, and the angle it makes with the meridian is the sun's true azimuth.

8th. The *difference of longitude* between any *two points* in either *one* of the two *straight* lines, is the error of longitude consequent to an error of latitude as great as the difference of latitude between the same points at their respective times of observation.

Example V.

[From Bowditch.]

'In a ship running N. by E. ½ E. per compass, 9 miles per hour, at 10^h A. M. per watch, the correct altitude of the sun's centre, was 13° 18', bearing S. ½ E. per compass; at 1^h 40^m P. M. per watch, the altitude of the centre was 14° 15'; the declination being 23° 28' S.; the latitude by account, 48° 17' N. Required the true latitude.'

Digitized by Google

And also by this method are shown the true correction of the first altitude for change of station; the sun's true azimuth and errors of longitude by chronometer, consequent to any error in the latitude, when the time is noted by chronometer.

1st. The elapsed time, $3^h\ 40^m$ is equal to 55°, or the difference of longitude of Z′ west of Z. (Plate II.)

2d. The two latitudes less and greater than the latitude by account, are 48° N. and 49° N.

3d. Find the apparent times from noon (method 3, B) with these latitudes, for each altitude.

FOR THE FIRST ALTITUDE, 13° 18′ A. M.

For a point A, in Latitude 48° *N.*

Lat. 48	N.	- - -	sec. 0.17449
Dec. 23 28	S.	- - - -	sec. 0.03749
Sum. 71 28		nat. cos. 31786	
⊙ Alt. 13 18		nat. sin. 23005	
H. M. S.		diff. - 8781	log, 3.94354
2 4 6		log rising, =	4.15552

2 4 6 = 31° 1½′ or diff. longitude (west, because A. M.) from Z, of the point A in latitude 48° N.

For a point A′ in Latitude 49° *N.*

Lat. 49	N.	- - -	sec. 0.18306
Dec. 23 28	S.	- - - -	sec. 0.03749
Sum. 72 28		nat. cos. 30126	
⊙ Alt. 13 18		nat. sin. 23005	
H. M. S.		diff. - 7121	log, 3.85254
1 52 37	=	log rising =	4.07309

1 52 37 = 28° 9¼′ or diff. longitude (west, because A. M.) from Z, of the point A′ in latitude 49° N.

Digitized by Google

FOR THE SECOND ALTITUDE, 14° 15′ P. M.

For a point B in Latitude 48° *N.*

Lat. 48	N. - - -		sec. 0.17449
Dec. 23 28	S. - - - -		sec. 0.03749
Sum. 71 28	nat. cos.	31786	
⊙ Alt. 14 15	nat. sin.	24612	
H. M. S.	diff. -	7171	log, 3.85558
1 51 53 =	log rising, =		4.06756

1 51 53 = 27° 58¼′ or diff. longitude (east because P. M.) from Z′ of the point B in latitude 48° N.

For a point B′ in Latitude 49° *N.*

Lat. 49	N. - - -		sec. 0.18306
Dec. 23 28	S. - - - -		sec. 0.03749
Sum. 72 28	nat. cos.	30126	
⊙ Alt. 14 15	nat. sin.	24615	
H. M. S.	diff. -	5511	log, 3.74123
1 38 51 =	log rising, =		3.96178

1 38 51 = 24° 42¾′ or diff. longitude (east, because P. M.) from Z′, of a point B′ in latitude 49° N.

4th. To project A, A′, B, B′, plate II.

A. { In latitude 48° N., and in any longitude, project a point; mark it '*A* 31° 1½′ *west of Z.*'

A′. { From 31° 1½′ = long. of A, west of Z,
Subtract 28° 9¼′ = long. of A′, west of Z.
Diff. is 2 52¼ = long. of A′, east of A.
Project A′, then, in latitude 49° N., 2° 52¼′ east from A, and mark it '*A′* 28° 9¼′ *west of Z.*'

Now find the difference of longitude of A from Z′; one observation is A. M., the other P. M., (see rule.)

Z′ is west of Z = 55° 00 by the elapsed time.
A is west of Z = 31 01½
A, then, is east of Z = 23 58½
Mark A, then, also, '*A* 23 58½ *east of Z′.*'

Digitized by Google

B. From 27° 58¼ = long. of B, east of Z′,
Subtract 23 58½ = long. of A, east of Z′,

Diff. is 3 59¾ = long. of B, east of A.
Project B. then, in latitude 48° N., and 3° 59¾ east from A, and mark it '*B* 27° 58¼′ *east of Z′*.'

B′. From 24° 42¾′ = long. of B′, east of Z′,
Subtract 23° 58½ = long. of A, east of Z′,

Diff. is 0 44½ = long. of B′, east of A.
Project B′, then, in latitude 49° N., and 0° 44½′ east from A, and mark it '*B′* 24° 42¾′ *east of Z′*.'

5th. Join A, A′, B, B′, with straight lines; from any point in AA′, as for instance A, set off a point D, 33 miles N. by E. ¼ E.; through D, parallel to AA′, draw a straight line DL; its intersection with BB′ at the point L, is in the *true latitude* at the time of the second observation, namely, 48° 51½′ *N.*

6th. From the point L, let fall a perpendicular LC on AA′; and LC is the correction in miles of the first altitude for change of station: namely, 22 miles subtractive by the scale.

7th. Produce LC, *towards Z*, and it will make an angle CxM, with the meridian; this angle, or its opposite, which is the same, is the sun's true azimuth, equal to S. 28° 16′ E., or 2½ points from S. nearly; and at the first observation the sun bore S. S. E. ½ E. nearly.

8th. If the chronometer time had been noted at the first observation, in order to find the longitude by chronometer, and a second observation had not been observed, the true latitude being, as we will suppose, 48° N.; then the ship would have really been at the point A, in the straight line AA′; but if the latitude by account had been erroneous 20′ *to the N.;* or 48° 20′ had been used to find the 'apparent time at the ship,' instead of 48° N., then the error of longitude by chronometer would be equal to the difference of longitude between A and the point P in the line AA′, in latitude, say 48° 20′ N. or 57′ of longitude; that is *one mile* error of latitude gives nearly *three minutes* error of longitude in this case.

Digitized by Google

NOTE.

The latitude found above is 48° 51½′ N., the latitude by Bowditch, old editions, is 48° 55′, by two operations; new editions, 48° 54′. The cause of this difference affords a good opportunity of testing the correctness of this method, without impeaching the accuracy of his rules.

The reason of this apparent difference is, that he has accidentally stated the sun's bearing to have been S. ¾ E., instead of S. S. E. ½ E., at the time of the first observation. It is an error of no consequence in itself, as it serves *to exemplify* his rules as well as the true bearing would.

This method gives 48° 55′ for the latitude, supposing the sun to have borne S. ¾ E.; and Bowditch's method gives 48° 51½′ for the latitude, if the sun bore S. S. E. ½ E. For the latitude of the *place of the first observation* by this method, is 48° 19′; and by his, 48° 23′, the dec. is 23° 28′ S., and the first altitude 13° 18′; we have, then,

⊙ Alt.	13° 18′	sec. 0.01181
P. D.	113° 28′	sec. 0.17717
Lat.	48° 19′	
Sum.	175° 05′	cos. 8.63238
½Sum.	87° 32½′	
P. D.	113° 28′	
Diff.	25° 55½′	cos. 9.95394
		2)18.77530
2 ×	75° 52′	cos. = 9.38765
	151° 44′	's azimuth from N.
	180° 00′	
	28° 16′	⊙'s azimuth from S.

If calculated with latitude 48° 23′, the ⊙'s azimuth will be 28° 06′, only 10′ difference.

Now S. S. E. ½ E. is S. 28° 07′ E. So it appears that the sun bore S. S. E. ½ E. nearly, and not S. ¾ E.

Let us see, that supposing the sun bore S. ¾ E., the two methods agree. From L, plate II, *the true latitude*, draw a line LP, parallel to AD, meeting AA′ in P; it will be 33

Digitized by Google

miles in length, on a course S. by W. ¾ W., or N. by E. ¾ E.; and P will be the place of the first observation.

Upon P, erect a perpendicular Py, which will be the sun's *true* bearing (S. S. E. ½ E.) at first observation; the angle yPL is the angle of the course sailed with respect to Py, or the sun's bearing; make the angle yPs equal to 1¾ points, and Ps will be in the direction S. ¾ E.; make angle LPp, equal to yPs; then yPp will be the angle of the course sailed with respect to Py, if the sun bore *S. ¾ E.;* from P set off the point, p, on Pp, at the distance of 33 miles; through p, draw a straight line pq, parallel to AA′, and the intersection at q is the true latitude, 48° 55′, if the sun bore S. ¾ E.; which is the same as Bowditch.

From q, let fall a perpendicular on AA′, meeting it in c′; qc′, should be the correction in miles to be subtracted from the first altitude if the sun bore S. ¾ E.; this distance, qc′, measured on the chart, is 29 miles; now 29 miles is the correction in reality used by Bowditch.

Thus it appears the two methods agree, but that the *true* azimuth is apparent by this method on inspection; and we learn, that an error of 1¾ points in the sun's bearing, by his method, makes an error of about 4 miles in the latitude, in this example.

The preceding problem includes the whole theory of double altitudes by this method; and however useful it may prove, it becomes much more so, when the times are noted by chronometer; for then the longitudes of the points A, A′, B, B′, become known at once; and thus the 'elapsed time,' will not appear as such in the problem; for it enters into the longitudes of the points B, B′, placing them so much *further west* as greater time elapses between the observations; thus we shall only have to find in the usual way, the longitude of the points by chronometer, and project them in their respective longitudes from Greenwich, and assumed latitudes.

And likewise, in accordance with problem III, when the latitude is uncertain, a *single* altitude of the sun becomes of great value to determine the ship's position,

Digitized by Google

because it shows the bearing of the land at *any* hour; in fact, as useful as two altitudes by any other method, when the times are noted by a common watch; and of equal value with a meridian observation; because these *only* show the *bearing of the land*, in the parallel of latitude; this last only *once* in day; and the first usually requires *two* opportunities for observation.

Digitized by Google

IV.

APPLICATION OF THESE PRINCIPLES TO THE FIXED STARS, PLANETS, AND MOON.

Double altitudes may be classified as follows:

CLASS I.

When the same body is observed at two different times.

CASE 1. The sun.
2. A fixed star.
3. A planet.
4. The moon.

CLASS II.

When two different bodies are observed at the same time.

CASE 5. Two fixed stars.
6. Two planets.
7. A planet and fixed star.
8. Moon and fixed star.
9. Moon and planet.
10. Moon and sun.

CLASS III.

When one body is observed at one time, and a different body at another time.

CASE 11. Two fixed stars.
12. Two planets.
13. A planet and a fixed star.
14. The sun and a fixed star.
15. The sun and a planet.
16. The moon and a fixed star.
17. The moon and a planet.
18. The moon and the sun.

Digitized by Google

It is plain that the same results will follow, if any celestial body is used, from which the apparent time at the ship can be known. It will be only necessary to consult the epitome upon the manner of finding the apparent time by any object observed; and apply this time in the same manner as when it is found by the sun's altitude.

The apparent time for the assumed latitudes can be found from any of the fixed stars, or planets, with accuracy, with a good horizon, and from the moon, when her right ascension and declination can be had. In all these cases, the *arcs* of the parallels of equal altitude corresponding to each altitude, are to be found in the same way as before. If the apparent time at the ship can be found from the altitude by any of *the rules in the epitome*, and the chronometer time is noted, then the latitude and longitude of each point may be at once projected, as in the case of the sun; and if the times of observation be noted by a common watch, then it may be *assumed* that the 'watch' shows approximate Greenwich time, by allowing its error, if fast or slow, as in problem III, practical part. The above will in general be the most simple method.

But we may also proceed as follows, the times being noted by watch.

Assume two latitudes, as before, with which, and the true declinations of the body at each observation, and the correct central altitudes, find the *hour angles*, or apparent times from noon, (Method 3, B,) turn these times into degrees for their respective differences of longitude, (east or west, according to which side of the meridian of the place of observation the body was observed,) from their respective poles Z and Z′.

The points A and A′ can be projected, as before; but to project B, B′, with reference to AA′, the value of the arc ZZ′ must be found by one of the following rules; because the elapsed time without a correction turned into degrees will not in all cases express the difference of longitude between Z and Z′.

This being done, BB′ can be also projected, and the

Digitized by Google

intersection will show the *true latitude* as before, allowing for change of station.

All cases in which the moon is one of the bodies, will be liable to error, unless the ship's position in longitude is nearly known beforehand, for her right ascension and declination must be known with accuracy at the time of observation, her motion being greater than any other body; in Case 4, however, it is only *hourly motion* in right ascension and the declinations that are required, and these can be ascertained nearly enough for common use. (See Appendix, Bowditch.)

The sun's and planets' proper motions are much slower, and their right ascensions and declinations can be had accurately.

The arc ZZ′ is greater than 180° (or must be subtracted from 360°) when the great circle which passes through the positions in the heavens, in which the bodies were observed, passes also *below* the elevated pole, the bodies being also observed on different sides of the meridian. In all other cases ZZ′ is less than 180°.

All bodies situated below a great circle passing through the east and west points of the horizon and the elevated pole are *below* the pole.

Care must be taken not to mistake *which pole*, Z or Z′, belongs to *which object;* for this purpose it will be useful to remember, that the body which has the *greatest* altitude has its pole of illumination the *nearest* to the observer; and always name the eastern pole Z, the western one Z′.

The nearer the bodies are observed at right angles to each other, whatever method of calculation is used, the more likely is the result to be accurate.

Two of these bodies may be observed, either *both eastward* from *the meridian*, or *both westward;* or *one eastward*, and *one westward;* and in this respect, the times of observation are similar to the *two* altitudes of *the sun*, which are observed either *both A. M.*, both P. M., or *one A. M.* and *one P. M.;* in every case, for uniformity, it will

Digitized by Google

be proper always to call the *eastern* pole Z, and the *western* pole Z′; and having found the value of the arc ZZ′, to project the points A, A′, B, B′, *eastward* or *westward* of Z and Z′, as is designated by the body's having been observed when *east or west of the meridian.*

With the exception of class II, in all cases in which the sun is *not* one of the bodies, a correction is to be applied to the elapsed time, and is that quantity which is called XS in the following formulas.

The motion of the stars is *quicker* than that of the sun; it takes the sun 24 mean solar hours to make an apparent revolution round the earth; but the stars do the same thing in about $23^h\ 56^m$; in any given elapsed time, then, the stars will be a proportional distance *west* of the place where the sun would have been, had the sun been the body observed, the elapsed time being usually noted by watch, which shows *solar* time. The motion of the planets and moon is compounded of this motion, and their own proper motions in right ascension and declination.

This correction is $9^s.85647$ for every hour of elapsed time. The following table is calculated to make this allowance in those cases where it is required.

Table for finding the value of XS, *in the formulas, during* ET (*Elapsed Time.*)

ET	XS	ET	XS
Hours.	min. sec.	min.	sec.
1	0 09.856	1	0.164
2	0 19.713	2	0.329
3	0 29.569	3	0.493
4	0 39.426	4	0.657
5	0 49.282	5	0.821
6	0 59.139	10	1.643
7	1 08.995	15	2.464
8	1 18.852	20	3.285
9	1 28.708	25	4.107
10	1 38.565	30	4.928
11	1 48.421	35	5.750
12	1 58.278	40	6.571
		45	7.392
		50	8.214
		55	9 035
		60	9.856

EXAMPLE.

The Elapsed Time is $5^h\ 17^m$, what is the value of 'ET+XS.'

$5^h = 49^s.282$
$15^m = 2.464$
$2^m = 0.329$
$52.075 = XS$
$5\ 17\ 00 = ET$
Ans. $5^h\ 17^m\ 52^s = ET+XS.$

Digitized by Google

FORMULAS OR RULES

To find the value of the Arc ZZ′ in hours, minutes, and seconds, which, being turned into degrees, 15° to an hour, gives the diff. long. between Z and Z′.

CLASS I.

When the same body is observed at two different times.

Case 1. The sun

$ZZ' = ET$, or the elapsed time.

Case 2. A fixed star

$ZZ' = ET + XS$.

Case 3. A planet

$ZZ' = ET + XS \{\frac{-}{+}\}$ planet's *motion* in R. A. during ET, if R. A. is $\{\frac{\text{increasing}}{\text{decreasing.}}\}$

Case 4. The moon

$ZZ' = ET + XS -$ ☽'s motion in R. A. during ET.

In explanation of the rules. In Case 1st it has already been seen, that ZZ′ is equal to ET; but let P, (plate VIII, fig. 1,) be the elevated pole, ESS′W be a parallel of declination on which the R. A. is reckoned, HH′ a part of the horizon, O the place of the observer on the earth's surface, and PO the meridian passing through P and O. The arrows show the direction of the apparent motion.

Let S be the sun at the first observation. It is vertical to Z, below the horizon. After an elapsed time, the sun is again observed at S′; S′ is vertical to Z′; the arc SS′ is described by the sun, at the rate of 15° per hour of ET; the arc ZZ′ is then described in the same time; for the earth is a sphere, concentric with the celestial sphere; and difference of longitude between Z and Z′, or the arc ZZ′, is equal to the apparent difference of R. A. of S and S′, and is expressed by the elapsed time turned into degrees, 15° to an hour; therefore ZZ′ = ET.

Case 2d, (lower portion figure 2.) Let * be the position of a star. After an elapsed time by watch showing *solar* time it will at *′; if it had been the sun the second

Digitized by Google

altitude would have been taken when he was at ⊙S, and the arc * S would be equal to ET = ZZ′; but since the star moves quicker than the sun, it will have reached the position *′ at X, during the elapsed time by watch; being an excess = the arc XS; * is vertical to Z′, and *′ is vertical to Z; ZZ′ then is equal to **′ or = ET + XS; but since it is required to reckon the difference of longitudes of Z and Z′ from O, the place of the observer on the earth's surface, ZZ′ must be taken greater than 180°; that is, ZZ′ in degrees, must be subtracted from 360°; because the great circle GC, which passes through the positions where the body was observed, and also observed on different sides of the meridian, passes *below* P, the elevated pole.

This case is a simple one.

Case 3d, (upper portion, figure 2.) Let P be the position of a planet when first observed; it is vertical to Z; after an elapsed time by watch, it may be taken at P′, vertical to Z′; therefore ZZ′ = PP′. If it had been the sun it would have been observed at S⊙ the second time; but PS = ET; and being a star, the correction XS must be added as before; and ⁂ is the place in which it would have been observed, had it been a fixed star; but during ET, it has moved from ⁂ to P′, by its own proper motion in R. A., *towards the east;* * P′ then must be subtracted (the R. A. increasing:) we have then (PX,) or (ET + XS) —(XP′, or planet's motion east, in R. A., during ET) = PP′ = ZZ′ as in the formula. If the planet's proper motion be to the west, or R. A. is decreasing, it must be *added* to ET+XS.

This is an easy case, by this method.

Case 4. The moon, figure 2. This is sufficiently explained by the last; the moon's motion in R. A. being *always* E., is always subtractive.

CLASS II.

When two different bodies are observed at the same time.

ZZ′ = difference of R. A. of the bodies at the instant of observation, in all the cases of this class.

In figure 3, the objects are observed on *different sides* of the meridian PO; and the great circle GC passes *above*

Digitized by Google

the pole P; ZZ′ is therefore *less* than 180°. But in figure 4, the objects are observed on *different sides* of the meridian, and the great circle GC, passing through the position of the two objects, passes also *below* the pole P; therefore, ZZ′ will be *greater* than 180°; then the *difference R. A.* must be turned into degrees and subtracted from 360° to find ZZ′.

In the *two* cases in figure 5, because the objects are both observed on the *same* side of the meridian PO, ZZ′ is *less* than 180° in both cases, although in one case GC is *above*, and in the other *below* the elevated pole.

It is evident ZZ′ = difference of R. A. of the bodies, in all these cases.

Those cases of this class, in which the moon is *not* one of the bodies, are important, as the observations can be frequently taken with great accuracy; particularly in the twilight, and they are attended with but little more trouble than the observations of the sun, because it is not required to find the '*apparent time at the ship*,' but only the *hour angle*, or that time which is found (method 3, Bowditch,) in Table XXIII, in column, '*log rising*.'

But, if the apparent time at the ship be found for *one* point in each arc, and the *chronometer* time be noted for each altitude, then the longitudes of the other points, A′, B′, may be found, and the position of the ship in latitude and longitude.

The R. A. of the fixed stars and planets, is, too, readily found, in the large edition of the nautical almanac.

CLASS III.

When one body is observed at one time, and a different body at another time.

This class comprehends a great variety of circumstances, under which the bodies may be observed. By a few examples, the manner of finding the value of ZZ′, in any case, will be understood.

Let A, figure 6, be the *eastern* body, and the *first* observed; and B, the other body, westward from it.

The arc AB, is the difference of R. A. of the bodies at the time of the first observation. After A is observed,

Digitized by Google

and a time has elapsed by watch, A will have advanced westward to a point S; and B will have reached T; let B be now observed at T, and TS is the difference of R. A. of the bodies at the time of the second observation.

If A be the *sun*, the arc AS will be equal to the elapsed time, ET; and ZZ′ is equal to the sum of the arcs AS, and ST; that is,

ZZ′ = ET + (difference of R. A. of the bodies at the *time of the second observation.*)

And ZZ′ is less than 180°; because GC is *above* the elevated pole.

If A be a *fixed star*, it will arrive at X, in the same elapsed time, instead of S; then, TX will be difference of R. A. of the bodies at the *time of the second observation; and* AX + TX = ZZ′, that is,

ZZ′ = ET + XS + difference of R. A., at the time of the second observation.

If A be a *planet*, and have no proper motion in R. A., it will be the same case as the last, and will arrive at X; but having arrived at X, if it have a proper *motion in R. A.*, increasing, (or going E.,) it will during ET, arrive at some point b; and Tb will be the difference of *R. A. at the time of the second observation;* we have, then, ZZ′ = AT = ET + XS — (Zb, or planet's motion in R. A., during ET,) + difference of R. A. at the time of the second observation.

But when the planet's motion in R. A. is westward, (or decreasing,) *then it will* arrive at some point *a*, during ET, and *Xa* must be *added.* T*a* will then be the difference of R. A. at the time of the second observation.

If A be the moon, her motion in R. A., during ET, being always east, (or increasing,) must be always subtracted, and we have

ZZ′ = ET + XS — Xb + R. A. at the time of the second observation.

Figure 7. If A be the *eastern* body, and B, the *western* body, be *first* observed, and A be not observed until it reaches S, having passed the position in the heavens where B was observed at B, then,

If A be the ⊙; AS, is the elapsed time, *and AB*, the difference of R. A. at the time of the first observation;

Digitized by Google

SB is equal to ZZ′, and ZZ′ = ET — difference of R. A., at the time of the first observation.

But if B be the sun, TB is the elapsed time, and TS the difference of R. A. at the time of the second observation, then

ZZ′ = ET — difference of R. A., at the time of the second observation.

Figure 8. If A be the sun, the *eastern* body, and *first* observed, then after an elapsed time, it will reach S; and B, the other body, will reach T, which then observe; then, AS = ET; and TS = difference of R. A., at the time of the second observation; and AT = ZZ′; then

ZZ′ = difference of R. A. at the time of the second observation — ET.

The bodies being observed on the same side of the meridian, ZZ′ is less than 180°.

In figure 6, A, the sun, was also the *eastern* body, and *first* observed, but the rule for finding ZZ′, is different, because both objects were *above* the pole, and the apparent motion was from east to west; but in this case, both bodies being *below* the pole, the apparent motion is reversed, or from west to east, and in this case we might with propriety call A *west* of B, although it appears to be east of it, and will appear so, when both are *above* the pole.

In this manner, by attention to the *circumstances* of the observation, a rough diagram may be made, and the value of ZZ′ may be readily found; and it will be necessary, for this purpose, for one of the cases of 'Class III,' to notice

1st. *What two* bodies are used.

2d. Which was *first* observed.

3d. Which was the *eastern*.

4th. Which *side* of the meridian was *each* observed.

5th. Did the great circle passing through the positions in the heavens where the bodies were observed, pass also *below* the elevated pole?

6. Was the second body observed *before*, or *after* it passed the position in the heavens, where the other body was *previously* observed?

These two last considerations will seldom be required, but to include all *possible* circumstances they are given.

By using discrimination in the bodies used, these ob-

Digitized by Google

servations will be found useful, and when familiar with the principles, they will be found quite simple.

The motion of the planets in R. A. is generally small during ET, and can for the most part be neglected; a glance at the Ephemeris of the planets in the nautical almanac, is sufficient to determine this. The planets, will be found exceedingly useful for these observations; or for meridian observations for the latitude; but the moon cannot always be relied on *for a meridian altitude*, because her *meridian altitude* is not always her *greatest* altitude; and unless the ship's position in longitude, or the Greenwich time is well known beforehand, it will be impossible to be accurate in finding *her right ascension and declination.*

Digitized by Google

V.

CURRENTS IN THE GULF OF MEXICO AND THE FLORIDA STREAM.

By plate IX, are shown the currents experienced in the Gulf, in June, 1840.

The position of the ship was found by the method of projection; and the accuracy of the work was tested by the *usual meridian* observations, and chronometer sights, the sun bearing E. or W.

The land was not seen, neither any light, after leaving the Mississippi. Soundings were had on the Tortugas Bank, on the evening of 21st June, but the ship was some 20 miles further E. than marked on the chart for the noon of that day; for only the distances, *made good* from *noon to noon*, are shown by the chart.

The full black line ——— shows the true course and distance daily, by chronometer, &c.

The light black line ——— shows the course and distance by log, carefully attended to; and is carried out without correction for the observations, for the whole distance from the 10th to the 25th inclusive.

The dotted lines ..... show the daily courses and distances by log, reckoned from the position of the ship at each preceding noon determined by observation; and the daily differences caused by currents.

The arrows point in the direction of the current, and the velocity is marked in miles and parts. To prevent confusion on the chart, they are placed at the ends of the dotted lines. They should be referred to the *full* black lines, in order to show the *place where* the currents existed; thus, between 18th and 19th, on the full black line, the current was S. by W. ½ W., 2¼ miles per hour.

The figure of the ship on the 10th, shows which way she headed, while the full black line shows which way she was going over the ground.

Digitized by Google

EXTRACT FROM THE JOURNAL.

IN THE GULF OF MEXICO.

Sea act. 1840.	Dist.	Course.	Winds.	Clear weather throughout.	Under what sail.	Error in 24 hours.	Velocity. Miles.	Direction.
June 10	105	SE ½ S	ENE ½ E	strong br'zs.	s. reefs	75	3 1-8	W ¾ N
11	96	SE b S	ENE ¼ E	do.	do.	34	1 1-2	NE b N
12	95	SSE ½ E	E ¾ N	do.	do.	43	1 3-4	NE ½ N
13	83	SSE ½ E	E ½ N	fresh	reefs out	42	1 3-4	NNW ¾ W
14	35	SE b E	E ENE	light	all sail	53	2 1-5	W b N ¼ N
15	84	SE b E ½ E	NE	fresh	do.	86	3 1-12	W b N ¼ N
16	98	ENE	SE ¼ S	do.	do.	50	2 1-12	W ¾ N
17	82	NE b E ½ E	SE ½ E	do.	do.	17	3-4	NW ¾ N
18	70	NE b E ¾ E	SE	moderate	do.	54	2 3-4	S b W ½ W
19	65	S b E ½ E	E ½ S	do.	do.	20	5-6	WNW
20	71	E ½ N	SSE ½ E	do.	do.	26	1 1-12	WNW ¾ W
21	95	S ½ W	SE b E ¾ E	fresh	do.	25	1	N b E ½ E
IN THE FLORIDA STREAM.								
22	53	ESE two tacks	ESE	strong	do.	70	2 1-12	E ½ N
23	150	NNE	ESE	fresh	do.	70	2 11-12	NE ½ N
24	156	N ½ W	ESE	moderate	do.	68	2 5 6	N ¼ E

Whole amount of current in every direction in 15 days = 735 miles.

It will be seen by the plate, that if no observation had been taken, that the dead reckoning placed the ship in the fair way of the stream, on *the 19th of June.* But if a course had then been shaped to the northward, a run of 40 hours would have put the ship ashore, in about longitude 84° latitude 30°.

The various directions and velocities of the currents, and the uncertainty of their duration, show how little dependence is to be placed in any 'reckoning' when thick weather prevents observations, and that a good *look-out* and attention to the lead are essentially necessary.

END.

Digitized by Google

Elapsed

24° 42¾' East of Z

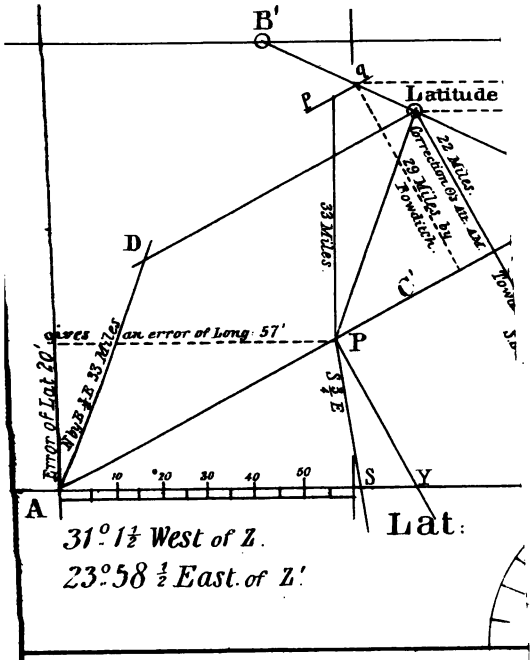

31° 1½ West of Z.

23° 58 ½ East of Z'

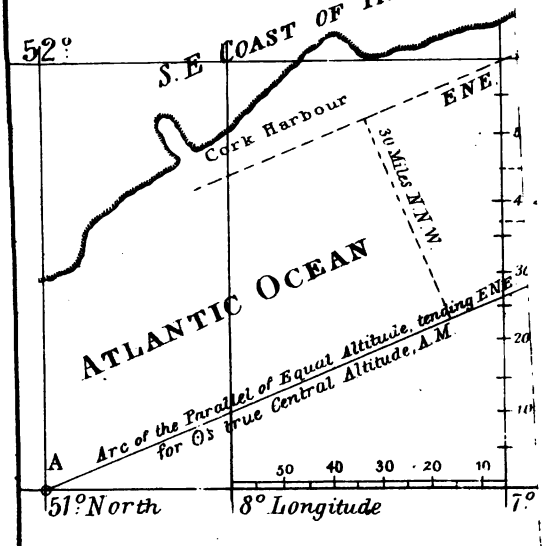

One Altitude of the SUN
find the true Bea

Sumner del. Bowe & Sharp Lith.rs Boston

Digitized by Google

Digitized by Google

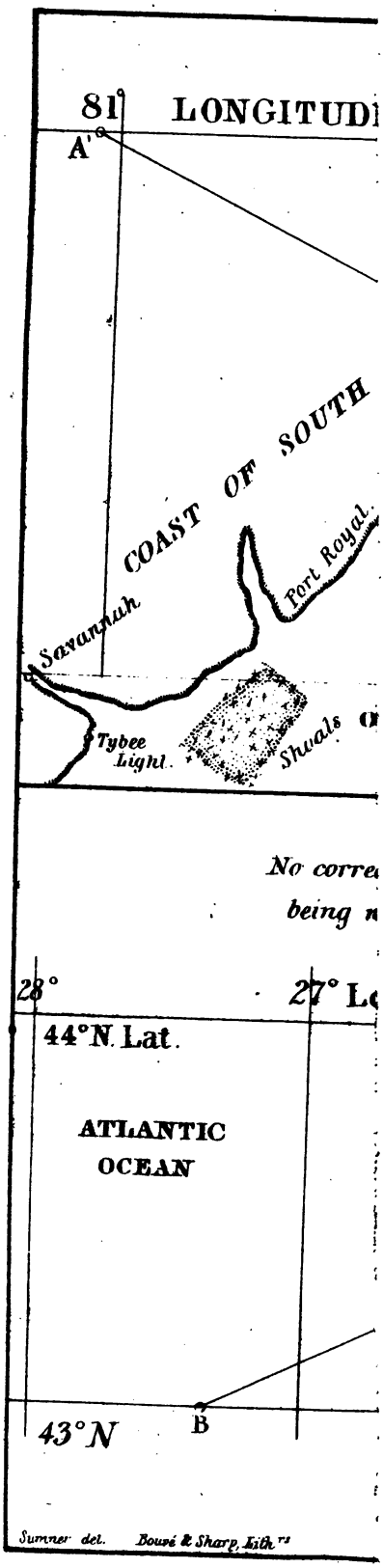

Digitized by Google

Digitized by Google

The times noted

Correction for c

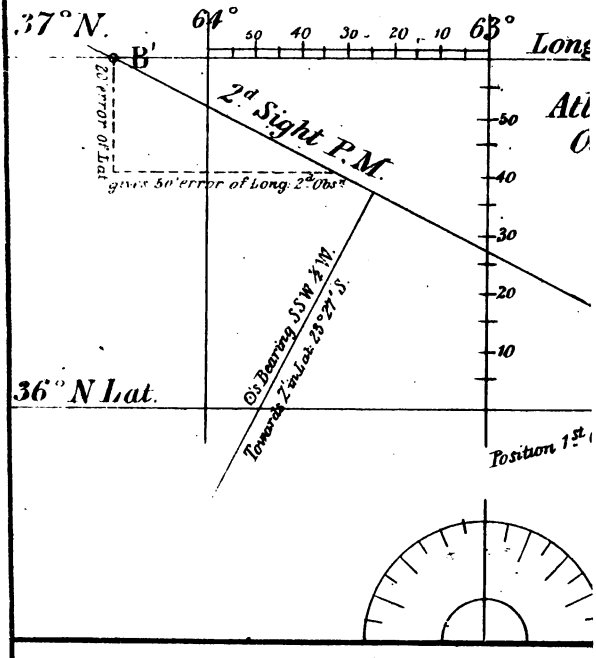

The times noted by a well

Elapsed Time is 46 m. 5 s. = 11

Between Z. & Z

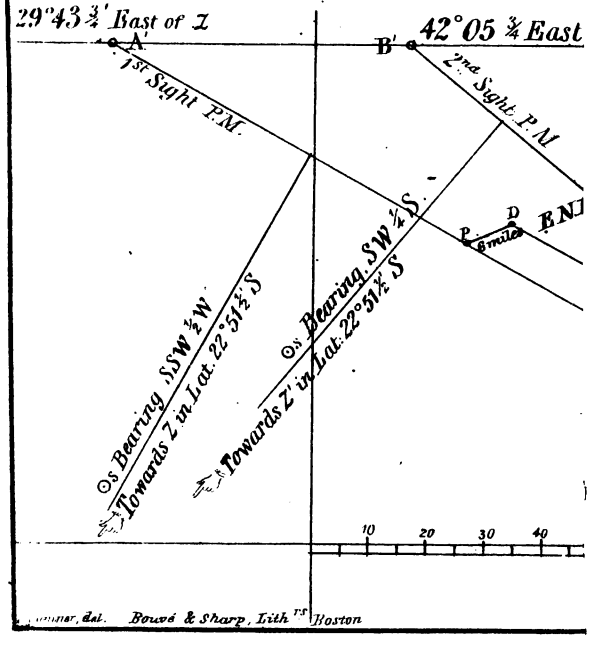

Digitized by Google

PLATE, VIII.

Fig. 1.

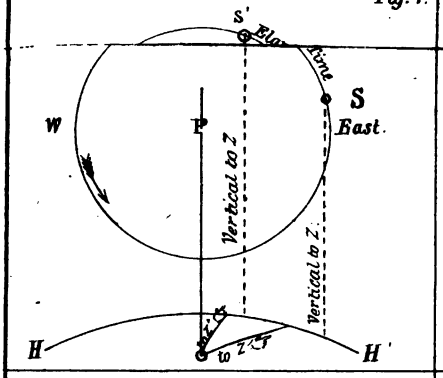

Fig. 2.

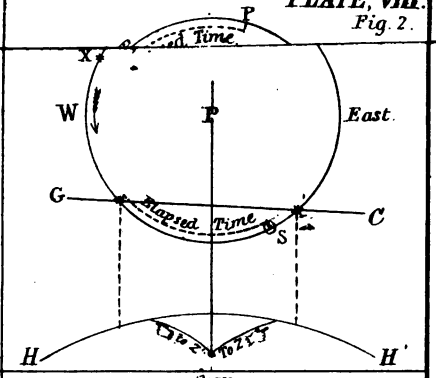

Fig. 3.

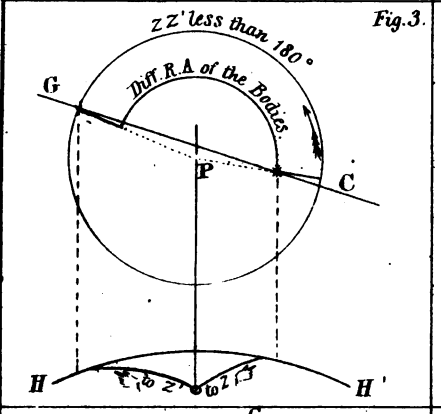

Fig. 4.

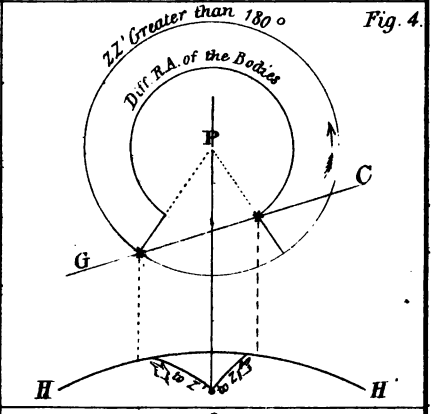

Fig. 5.

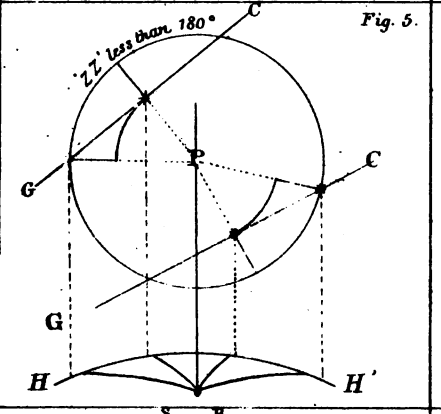

Fig. 6.

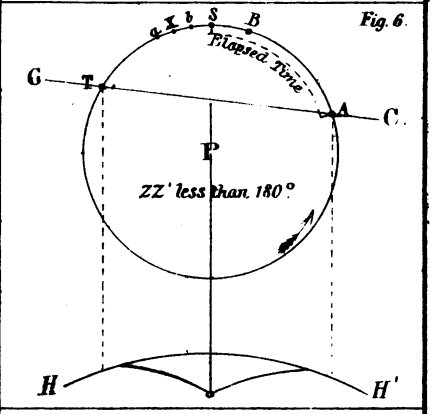

Fig. 7

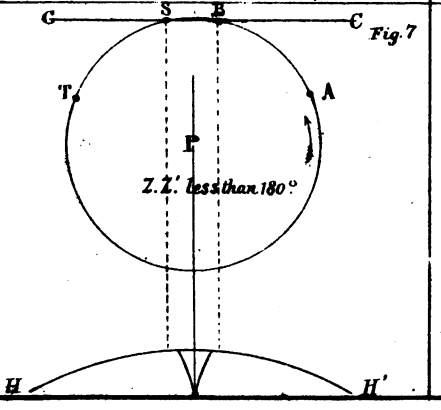

Fig. 8.

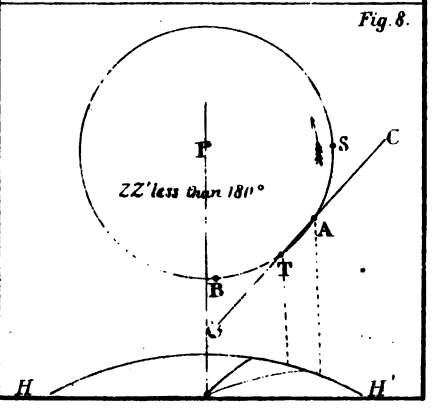

Sumner del. Bowie & Sharpe Lith.s Boston

Digitized by Google

Digitized by Google

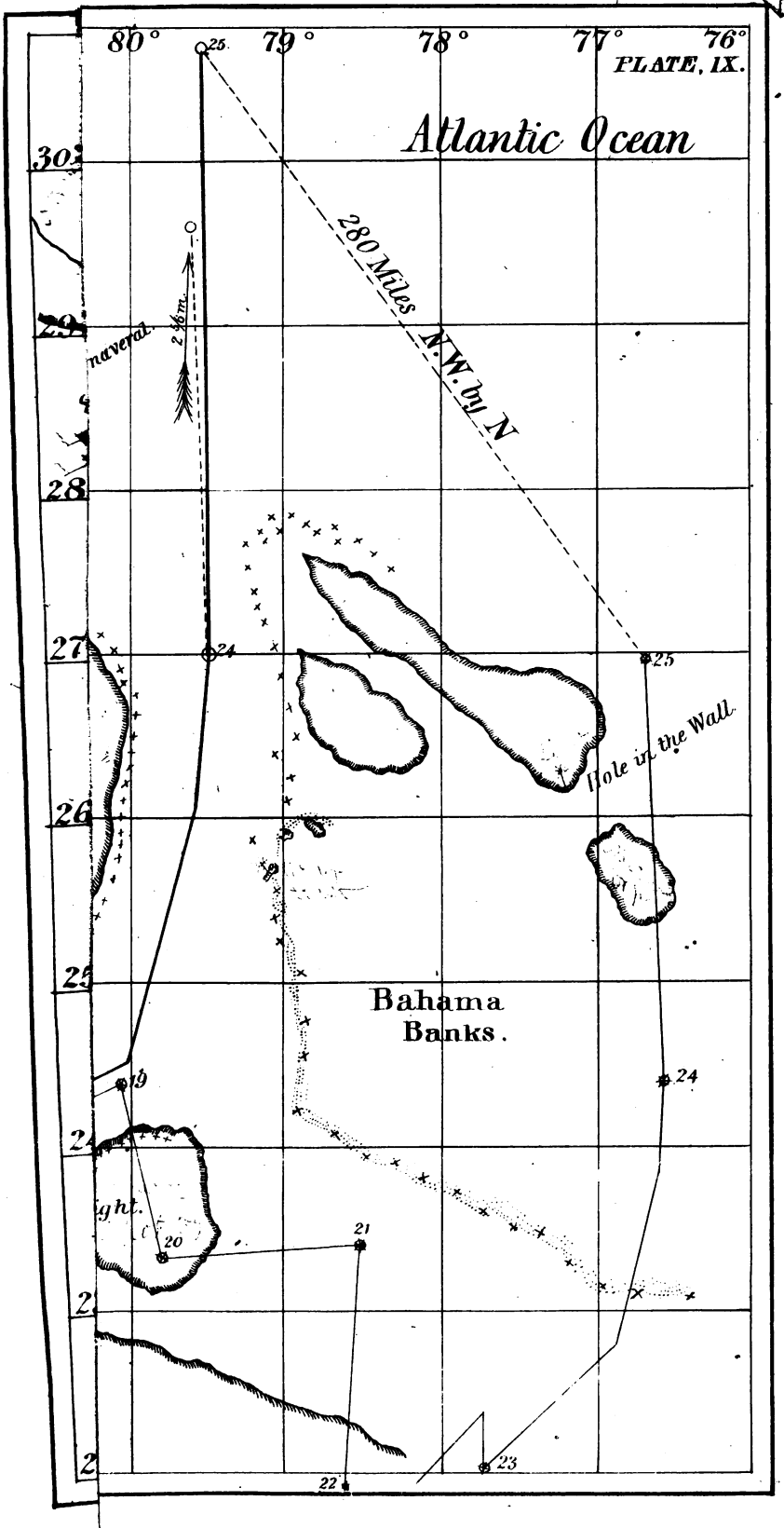

Digitized by Google

Digitized by Google

B 50529 4

UNIVERSITY OF MICHIGAN
3 9015 06940 7313

Digitized by Google